GUILD ◆ EDITION

Woodsmith®

Woodsmith.com

Vol. 43 / No. 254

Inside:

- **Mastering the Table Saw**
  Ripping Bevels
- **Router Workshop**
  Cut Circles & Arcs
- **Weekend Project**
  Martini Glasses

SLANT-FRONT BOOKCASE WITH DRAWER

Woodpeckers®

Precision Woodworking Squares

- One-piece central core machined to exacting tolerance.
- Stainless model includes scribing guides for perfect parallel layout.
- Lip formed by base keeps the square flat on your work.
- Scales engraved to a tolerance of ±.004" total stack-up error.
- Guaranteed accurate to ±.0085° for life.
- Available in inch or metric graduations.

UNMATCHED ACCURACY
LIFETIME Woodpeckers GUARANTEE
EST. 1988

Precision Woodworking Square
Includes a Woodpeckers wall-mountable wooden case
12" 1281....$119.99
12" 1282SS Stainless Steel....$139.99
Other Sizes Available on Woodpeck.com

Precision T-Squares

- Precisely spaced 1mm holes machined every 1/16".
- Laser engraved scale accurate to ±.004".
- Outer edges machined to a 30° bevel for easy reading.
- 600mm metric version available.

Precision T-Square
Includes a wall-mountable Rack-It™
TS-12 12"....$89.99
TS-24 24"....$124.99
TS-32 32"....$154.99

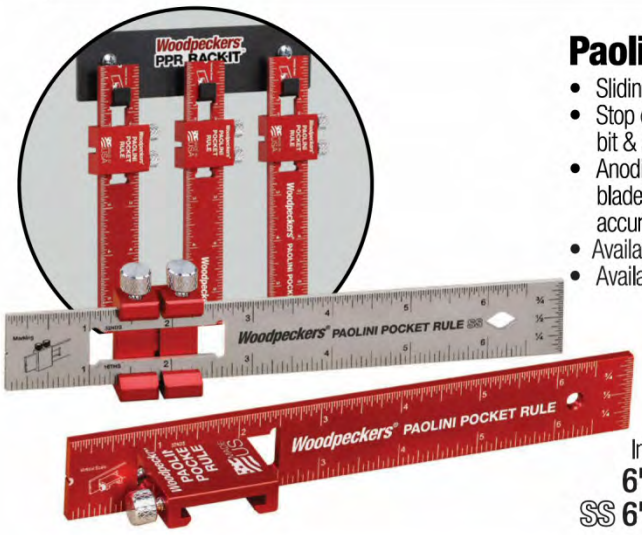

Paolini Pocket Rules

- Sliding stop simplifies repetitive marking.
- Stop doubles as stand to set router bit & saw blade height.
- Anodized aluminum or stainless steel blade with laser engraved scale accurate to ±.004".
- Available individually or as a set.
- Available in inch, metric or combination.

Paolini Pocket Rule
Includes a wall-mountable Rack-It™
6", 8", 12" Set....$124.99
SS 6", 8", 12" Set....$149.99

Saddle T-Squares

- Scribing holes on 1/32" centers.
- Milled from solid aluminum billet.
- Mark face and edge at the same time.
- Edges beveled 30° to reduce parallax.
- Scale accurate to ±.004".
- Available individually or as a set.
- Available in inch or metric graduations.
- Metric scribing guides on 1mm centers.

Includes a wall-mountable Rack-It™
Saddle T-Square Set....$299.99
Includes a Systainer case
Saddle T-Square Set....$369.99

in-DEXABLE Combination & Double Squares

- Push-button index locks head at any full-inch.
- Laser-cut scribing guides for precision parallel lines.
- Retractable support keeps head aligned to your stock.
- Combination & Double Squares in two sizes.

***in-DEXABLE* Squares**
Includes a wall-mountable Rack-It™
Double 6"....$129.99
Double XL 12"....$169.99
Combination 12"....$169.99
Combination XL 18"....$199.99
Other Sizes Available on Woodpeck.com

EZ Edge Corner Plane

- Plane sole is a perfect 90° to fit your stock.
- 3 radius profiles and 45° chamfer available.
- Hardened blades are easy to re-hone.
- Profile perfectly centered on your stock.

EZ Edge Corner Plane
Includes a wall-mountable Rack-It™
1/8", 3/16", 1/4" Radius
-or- 45° Chamfer....$159.99
Deluxe Set....$519.99

Clamping Squares PLUS & CSP Clamps

- Positions stock at right angles for joinery & fastening.
- Precision milled for both inside & outside alignment.
- Works with any clamp.
- CSP Clamps add speed & convenience.
- Available individually or as a set.

Clamping Squares PLUS Rack-It Kit™....$239.99

ULTRA·SHEAR™ by Woodpeckers®

Woodturning Tools

- Eliminate the drudgery of sharpening with nano-grain carbide inserts mounted to hardened alloy steel shafts.
- Sharpest, longest lasting carbide inserts on the market.
- Exclusive shaft design delivers both fast shaping & fine finishing.
- Also available in Full or Pen size.
- Square, round & detail tools available individually or as a set.

Mid-Size Woodturning Tool Set....$269.98
Other Sizes Available on Woodpeck.com

Woodpeck.com

MADE IN USA

Offset Base System

Made for Festool* Domino

- Attaches to both Festool Domino DF-500 & DF-700 XL.
- Wider, deeper referencing surface improves stability.
- Precision-milled spacers center mortise on standard dimensions.
- Outrigger carries stops for accurate repeat spacing.
- Available in inch or metric graduations.

Includes a Systainer case

Offset Base System....$429.99

Domino not included.

Parallel Guide System

Made for Festool* Track Saws

- Makes repetitive, parallel cuts with table saw accuracy.
- Maximum rip capacity of 52".
- Narrow stock guides deliver accurate results down to 1/4".

Includes a Systainer case

Parallel Guide System....$429.99

Saw not included.

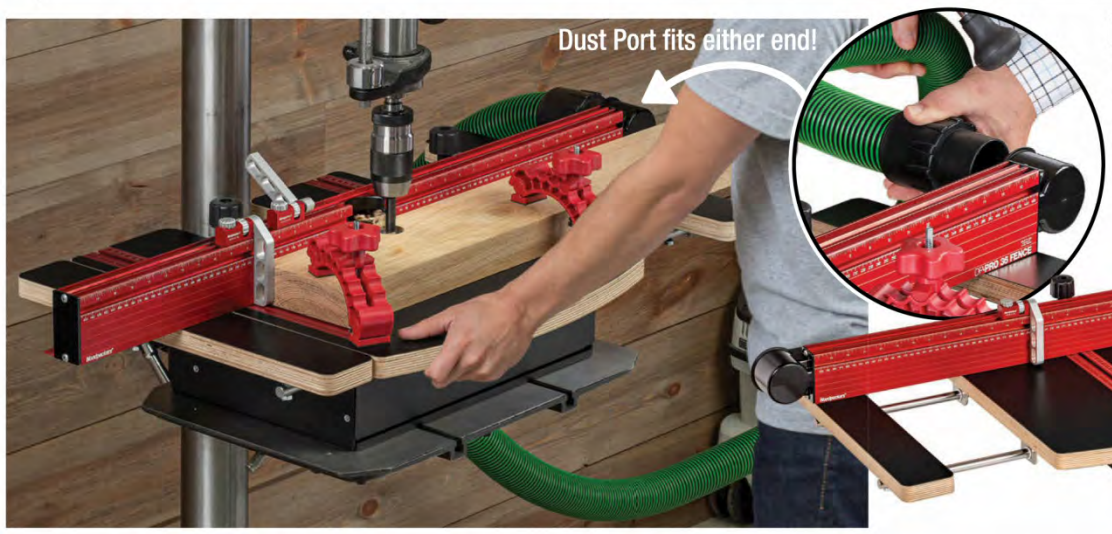

DP·PRO Drill Press Table System

NEW TOOL

- DP·PRO Fence integrates dust collection & delivers accuracy.
- Micro-adjustable DP·PRO Flip Stops.
- DP·PRO Drawer Base simplifies installation on any drill press.
- DP·PRO Tables are full 1" thick with laminate top & bottom.
- Extension Wings for long material support.
- Drawer Base and Fence compatible with all drill press tables.

DP·PRO Drill Press Table Master System

36" Table, 24" Fence.....$369.99
36" Table, 36" Fence.....$389.99
48" Table, 36" Fence.....$419.99
48" Table, 48" Fence.....$439.99

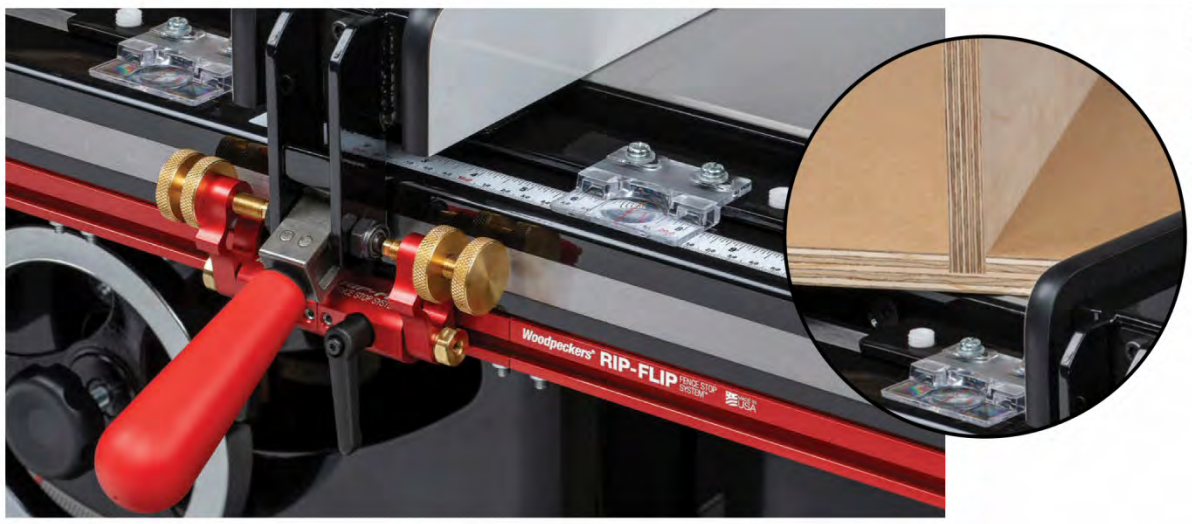

RIP-FLIP Fence Stop System™

NEW TOOL

- Bring your rip fence back to the same spot each and every time you need it.
- Stop drops out of the way when not needed, flips up when you want it.
- Couple two stops together for perfect fitting dadoes in two cuts.
- Models available for SawStop T-Glide Fences* and Powermatic Accu-Fences*.
- Extra stops and dado couplers available. Add as many as you need!

RIP-FLIP Fence Stop System

36" Capacity - *Fits SawStop**....$209.99
30" Capacity - *Fits Powermatic**....$219.99
52" Capacity - *Fits SawStop**.....$219.99
50" Capacity - *Fits Powermatic**....$229.99

DelVe Square SS®

- Offset base simplifies layout on standard 3/4" material.
- Perfect thirds for mortise and tenon layout.
- Perfect centers for dowel pins and loose tenons.
- Scribing Guides on eighth-inch centers.
- Machined steps in base create accurate set-up blocks.
- Angles in 1° increments plus 22-1/2°& 67-1/2°.

DelVe Square SS

Includes a wall-mountable Rack-It™

3-1/2"....$89.99
6"....$119.99
Inch Set....$189.99

Woodworkers Edge Rules

- Wraps around the corner of your stock for instant alignment.
- Mark face and edge at the same time.
- Optional stops simplify repetitive marking.
- Easy to use in the middle of a panel, as well.
- Sizes to fit every need…6-inch is perfect in your pocket.
- Available individually or as a set.
- Available in inch or metric graduations.

Woodworkers Edge Rule

Includes wall-mountable Rack-It™.

Edge Rule Kit & 4 Stops....$109.99

For more sizes & ordering options for these tools plus hundreds more, visit ***Woodpeck.com***

**NOTE: The Festool, DF-500, DF-700 XL, SawStop & Powermatic brand names are the registered trademarks of the respective companies and are not associated with Woodpeckers, LLC.*

Woodsmith®

EXECUTIVE EDITOR Phil Huber
ASSISTANT EDITORS Erich Lage, Logan Wittmer
CONTRIBUTING WRITER Bryan Nelson

EXECUTIVE ART DIRECTOR Todd Lambirth
SENIOR ILLUSTRATOR Dirk Ver Steeg
SENIOR GRAPHIC DESIGNERS Bob Zimmerman, Becky Kralicek
CONTRIBUTING ILLUSTRATOR Erich Lage

CREATIVE DIRECTOR Chris Fitch
PROJECT DESIGNER Dillon Baker
PROJECT DESIGNER/BUILDER John Doyle
CAD SPECIALIST/BUILDER Steve Johnson
SHOP CRAFTSMAN Marc Hopkins
CONTRIBUTING PHOTOGRAPHERS Chris Hennessey, Jack Coyier
SENIOR ELECTRONIC IMAGE SPECIALIST Allan Ruhnke

VP & GM, HOME GROUP Brian VanHeuverswyn

ADVERTISING DIRECTOR Jack Christiansen
847-724-5633
jchristiansen@aimmedia.com
AD PRODUCTION COORDINATOR Kim Hoff
GRAPHIC DESIGNER Julie Green

PRESIDENT, HOME GROUP Peter H. Miller

HOME GROUP
ACTIVE INTEREST MEDIA

Woodsmith® (ISSN 0164-4114) is published bimonthly by Active Interest Media Holdco, Inc., 2143 Grand Ave, Des Moines, IA 50312.
Woodsmith® is a registered trademark of Active Interest Media Holdco, Inc.
Copyright© 2021 Active Interest Media Holdco, Inc. All rights reserved.
Subscriptions: Single copy: $6.95.
Canadian Subscriptions: Canada Post Agreement No. 40038201. Send change of address information to PO Box 881, Station Main, Markham, ON L3P 8M6. Canada BN 82564 2911
Periodicals Postage Paid at Des Moines, IA, and at additional offices.
Postmaster: Send change of address to *Woodsmith*, Box 37274, Boone, IA 50037-0274.

Printed in U.S.A.

WoodsmithCustomerService.com

ONLINE SUBSCRIBER SERVICES

- **VIEW** your account information
- **PAY** your bill
- **RENEW** your subscription
- **CHANGE** your mailing or e-mail address

CUSTOMER SERVICE Phone: **800-333-5075** weekdays

SUBSCRIPTIONS
Customer Service
P.O. Box 842
Des Moines, IA 50304-9961
subscriptions@aimmedia.com

EDITORIAL
Woodsmith Magazine
2143 Grand Avenue
Des Moines, IA 50312
woodsmith@woodsmith.com

ACTIVE INTEREST MEDIA

PRESIDENT & CEO **Andrew W. Clurman**
SENIOR VICE PRESIDENT, TREASURER & CFO **Brian Sellstrom**
SENIOR VICE PRESIDENT, OPERATIONS **Pat Fox**
VICE PRESIDENT, PRODUCTION & MANUFACTURING **Phil Graham**
VICE PRESIDENT, PEOPLE & PLACES **JoAnn Thomas**
AIM BOARD CHAIR **Efrem Zimbalist III**

from the editor

Sawdust

Make it a set. As a woodworker, we have so many possibilites to take familiar projects in a different direction. Take the humble bookcase. We've featured dozens (just take a look at *www.WoodsmithPlans.com*). When a new bookcase plan came up on the schedule, we decided to work it into three-piece home office collection that started with last issue's desk and wall cabinet. The challenge is coming up with a design theme that looks good together without being repetitive. Of course, the bookcase looks great on its own, too. We'll be featuring this set in season 15 of the Woodsmith Shop later this fall.

Speaking of design, I got to play designer a bit, myself. The router table fence on page 48 is my own creation based on a shop need. While I hope you find these projects inspiring, I'd like to see how you adapt them to your needs, too. Send your photos to phuber@aimmedia.com

TODD LAMBIRTH, ART DIRECTOR

◄ Todd started his Woodsmith Art Direction gig in 1995, after a move back "home" from Phoenix, Arizona. This marked the beginning of the digital era for *Woodsmith* as he helped usher in the extensive use of computer technology to bring this Magazine where it is today.

A "maker" of the truest sort, Todd dabbles in many things that require the use of hands and tools. Restoring classic cars, combining woodworking with audio electronics, and old house renovation are a few examples of activities close to his heart.

contents

No. 254 • April/May 2021

Projects

turning project

Martini Glasses 22

Combine wood with cast resin to create eye-catching glasses to toast a job well done.

outdoor project

Patio Planter 26

Tapered stave construction is made easy on this container. A custom copper band bumps up the appeal.

heirloom project

Day Bed 32

Build this historically inspired lounge to make a statement in your living room — and about your woodworking skill.

designer project

Slant Front Bookcase 40

Form and function stand side by side in this bookcase-on-stand. Its compact size works in most every room.

shop project

Micro-Adjust Router Fence 48

Put the mallet down. This router fence easily adjusts for perfect cuts with the turn of a knob.

Departments

from our readers

Tips & Techniques 6

all about

Carbide Turning Tools 10

great gear

Wood Insert Joinery 14

woodworking technique

Casting Resin & Wood 20

router workshop

Cutting Circles 56

woodworking technique

Using Hide Glue 60

mastering the table saw

Ripping Bevels 64

Sources 66

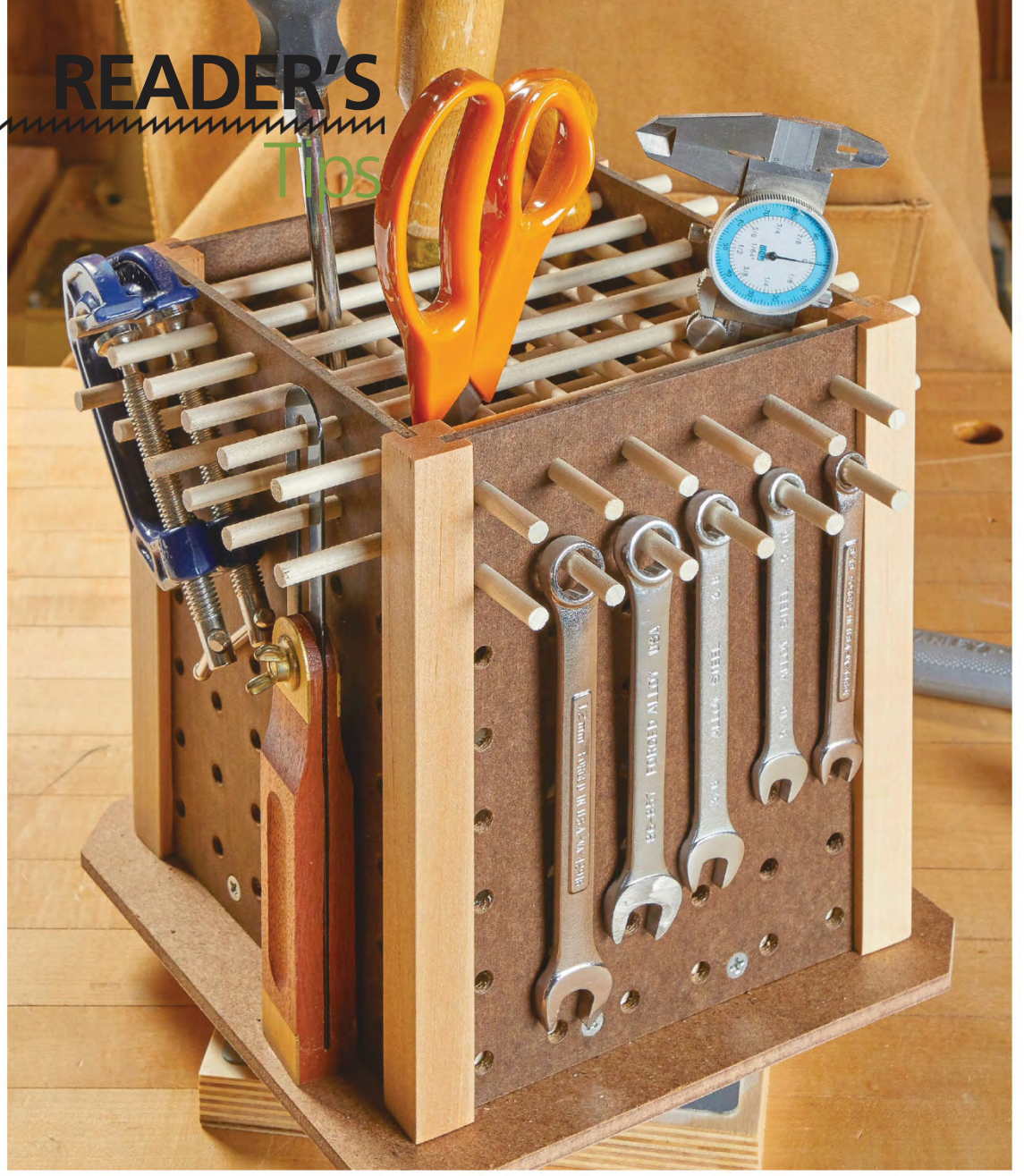

▲ Adding a set of adhesive-backed magnets to one side provides a handy place to store small shop tools.

Modular Pegboard Caddy

If you need a way to keep small hand tools organized on your workbench, much like I did, then this lazy Susan tool caddy is a quick project for you. The caddy has pegboard sides held by grooved corner posts. You'll want to make sure the holes in the opposite sides line up with each other. You can slide ¼" dowels through the sides to divide the space inside the caddy. To hold bigger tools, simply skip over a line of holes to create larger storage areas.

By making the dowels extra long, you'll have a great place to hang small hand tools like wrenches. A ¾"-thick plug screwed to the caddy keeps it square. Self-adhesive magnetic strips can be added to the outside of the caddy to hold smaller tools, like driver bits, a metal rule, or jigsaw blades.

Sally Neimeier
Cedar Rapids, Iowa

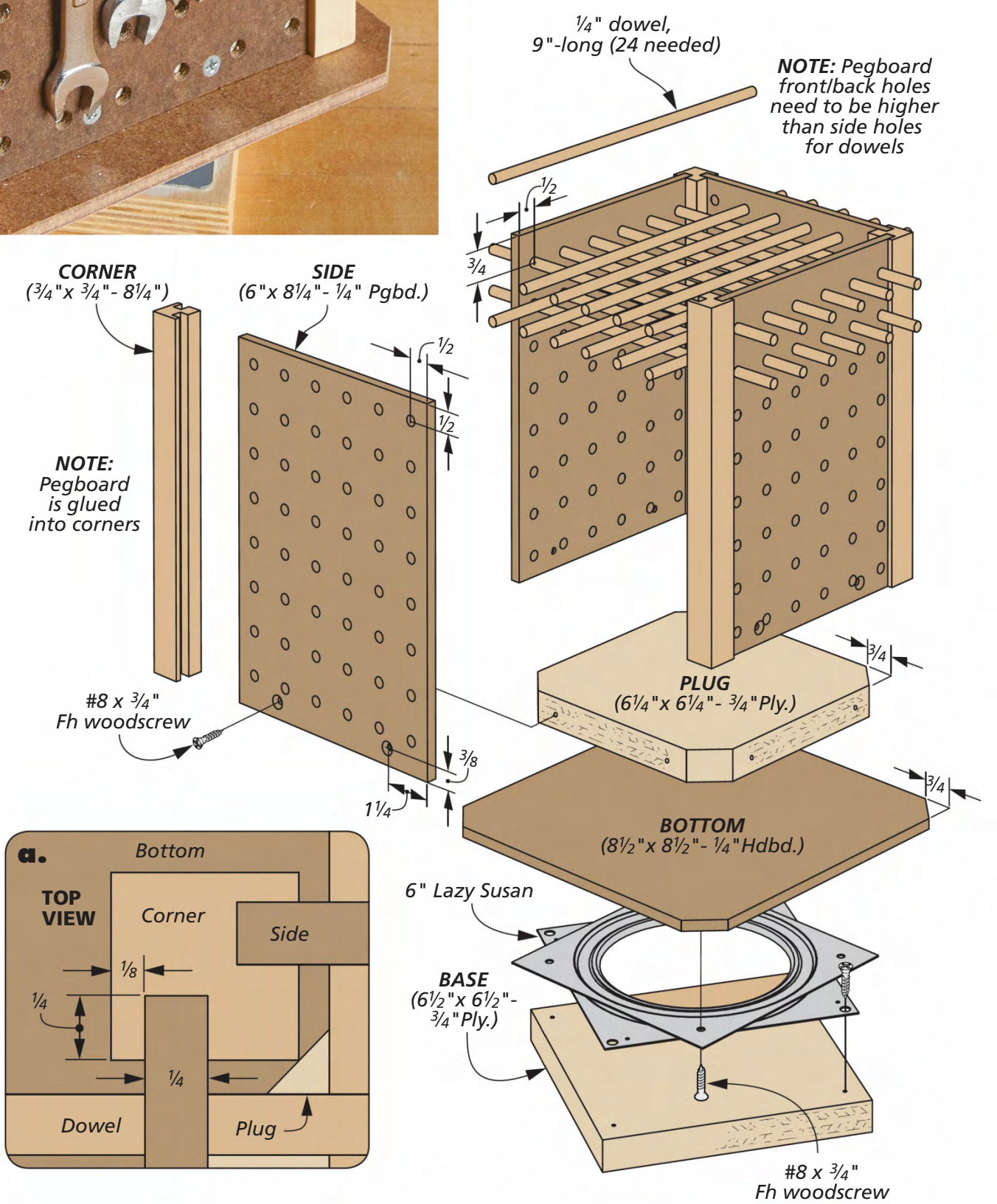

QUICK TIPS

Apron Helper. *Carol Roy* of *Grand Rapids, MI*
Carol found herself switching between a drill bit and driver on a recent project. Instead of putting the bits in her apron pocket only to get buried in dust, Carol used a pair of magnets clipped to her apron. That way, Carol can snap the bit, driver, and screws on the front of her apron.

Foam Painter's Points. *Seth Deitrich* of *Port Hillard, MA*
needed a few painter's points when finishing a project. Seth utilized some polystyrene scraps he had laying around his shop. By driving a long screw through squares of foam, they create the perfect, quick painter's points. The foam holds the screw so it doen't fall over, and you can support the piece without marring the freshly finished surface.

Illustrations: Becky Kralicek

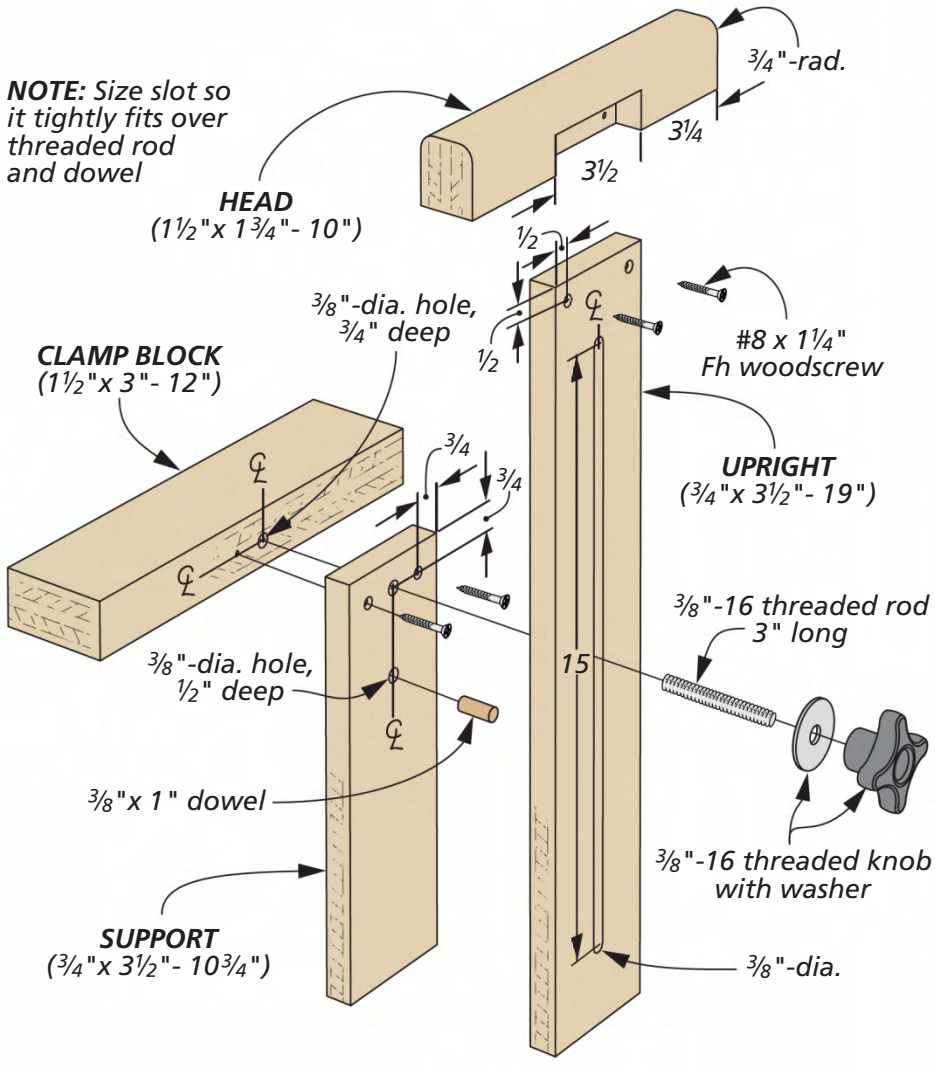

Outfeed support

Outfeed support is nice to have on a table saw. I often use one that clamps to the rear rail of the table saw. However, on a recent playhouse build, I needed an outfeed support that was further away from the saw. So, I came up with this support that clamps on a sawhorse.

SIMPLE FORM. The support has a clamping block that's glued and screwed together. To allow for easy adjustment, there's a groove in the support allowing you to lock it in place with a piece of threaded rod and a knob. The head has a large roundover so workpieces slide onto it easily. A notch in it fits over the upright, and it's screwed in place. After clamping the support on a sawhorse, I can adjust the head height with the threaded knob and make my cuts.

Phil Huber
Urbandale, Iowa

SUBMIT A TIP TO WIN

If you have an original shop tip, we would like to hear from you! Jump online and go to:

SubmitWoodsmithTips.com

You'll be able to tell us all about your tip and upload your photos and drawings. You can also mail your tips to "Woodsmith Tips" at the editorial address shown on page 4. If youre tip is selected it will get published right here in the magazine. You'll be entered to win a gift cart to *Lee Valley*.

DIGITAL WOODSMITH

RECEIVE FREE ETIPS BY EMAIL

Now you can have the best time-saving secrets, solutions, and techniques sent directly to your email inbox. Simply go to:

Woodsmith.com

and click on,

Woodsmith eTips

You'll receive one of our favorite tips by email each and every week.

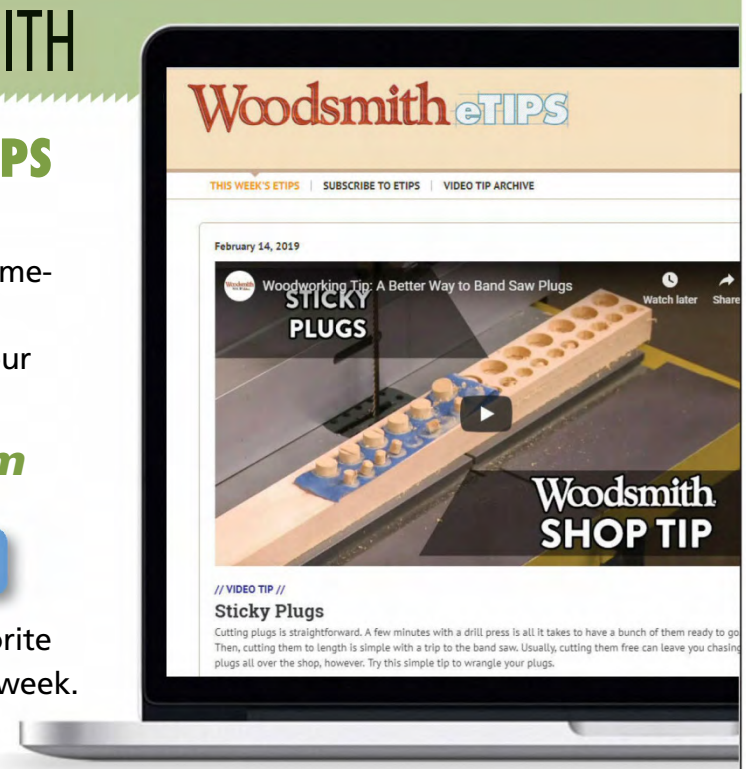

QUICK TIPS

Bright Tool Markings. *Ronald Yoder* of *Burnsville, MN* has found that reading the engraved names and sizes of wrenches in his shop to be difficult in low light. The solution he came up with is to use an oil paint pen. The paint flows down into the recessed markings and after wiping away the excess, the wrenches are much easier to read.

Trimming Dowels. *Logan Wittmer* of *Runnells, IA* recently needed to trim some dowels flush on a project. Knowing that a flush trim saw can often scratch the surface, Logan used a sanding disc as a spacer when trimming the dowel. The thickness of the disc leaves the dowel slightly proud of the surface and it can be sanded flush.

EST 1928

WOODCRAFT®

74 Stores Nationwide – Stop In And Visit With Us!

QUALITY WOODWORKING TOOLS • SUPPLIES • ADVICE®

Build More Than Furniture

Working with your hands provides a sense of accomplishment like none other. Let Woodcraft help you get started, expand your skills and take your woodworking to the next level.

TOGETHER, WE CAN CREATE ANYTHING®

To Learn More About Anne Briggs – Anne Of All Trades,
Visit: woodcraft.com/ws-annebriggs

For A Free Catalog Or To Find Your Local Woodcraft Store, Visit woodcraft.com Or Call 800-225-1153. Follow Us: 21WS05H

Illustrations: Becky Kralicek

ALL About

Carbide Turning Tools

The four most common profiles available from *Easy Wood Tools* cover almost all turning needs.

When it comes to woodturning, I often get asked about carbide tools and if I recommend them to a beginner. My answer is almost always the same: "If you want an easy-to-use tool and don't want to learn to sharpen, then yes, use them." However, that's not to say that they don't have a place at a traditional turner's lathe (I consider myself a traditional turner). So here, I want to dig into some of the finer points of carbide turning tools, how they're used, and how you can use them at your lathe.

THE BASICS. As you can see in the main photo above and at left, carbide turning tools look a little different than traditional cutting tools. A carbide tool consists of a handle with a steel bar. That bar holds a small carbide cutter at the end. The photo to the left shows the common shapes of carbide tools (these are from *Easy Wood Tools*). I'll talk more on the different shapes in a bit. Also know that the cutters can be swapped out for a negative rake cutter, such as the drawing above. This produces a much lighter cut and leaves a cleaner surface than the standard cutters.

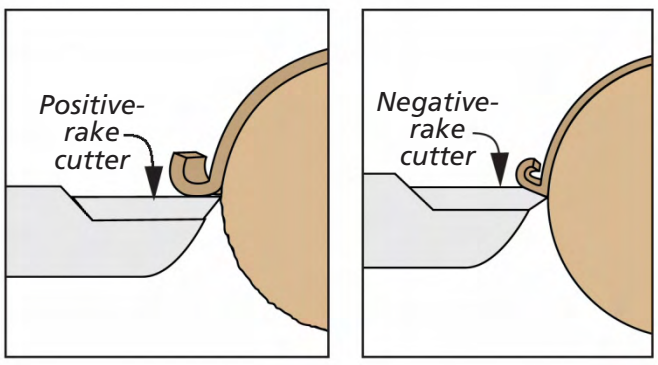

Rake angle. A positive-rake cutter gives a more aggressive bite but leaves a rougher surface. A negative-rake cutter is less aggressive, thus leaving a smoother surface.

Written by: Logan Wittmer

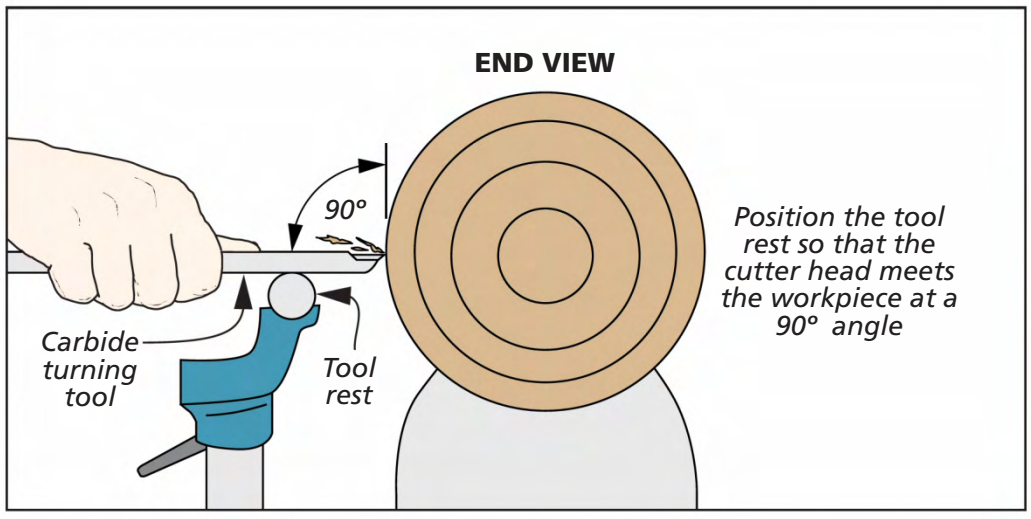

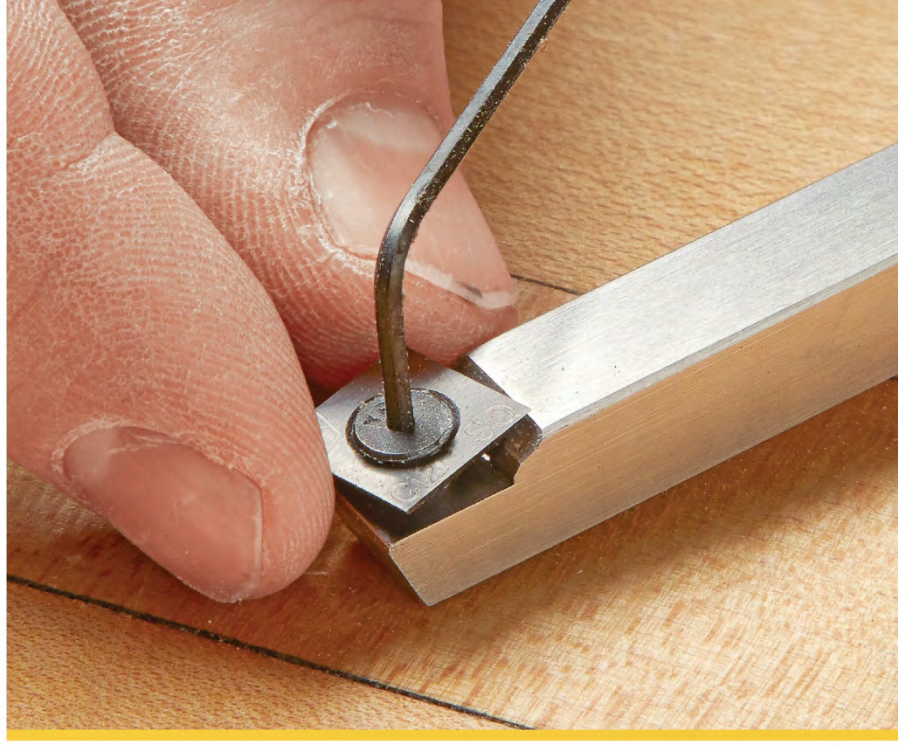

One advantage of carbide cutters is that you can simply rotate the cutter to a new edge when the current one becomes dull.

EASE OF USE. By far, the biggest appeal of carbide turning tools are that they are very simple to use. The drawing above shows the basics. With a carbide tool, you simply need to have the tool rest positioned so the carbide cutter is along the center point of the work, and you feed the tool into the wood at a 90° angle. There's no need to worry about riding a bevel or presenting the tool at the proper angle, like with traditional tools.

VERSATILE. Another appeal of carbide tools, and the biggest benefit to a traditional turner, is that they work well on a variety of materials. They work great on wood, such as the main photo on the previous page. They also excel at synthetic materials, such as the epoxy resin below, and the resin-blended martini glasses on page 22.

I also like the fact that, because there's no bevel to ride, you have the ability to reach a cutter into a vessel. The swan-neck tool, shown on the bottom of the previous page and in the lower right photo, makes quick work of hollowing the inside of hollow-form vessels.

QUICK ROTATION. Even though tungsten carbide is a very hard material and lasts a long time, it will eventually dull. But, this isn't that big of a deal on carbide tools. You can quickly loosen the cutter screw and rotate the cutter to produce a fresh cutting edge.

The square cutter, as seen in the photo above, has four cutting edges and can quickly be rotated. With the round and diamond cutter, you can turn the cutter 180° and produce a fresh edge. When all edges of the cutter are eventually dull, it can be replaced for a fraction of the cost of a new tool.

THE SURFACE. One of the only drawbacks of carbide cutters is the surface that is left behind. Because they scrape rather than cut, they generally don't leave as smooth as surface as traditional tools. That being said, a sharp carbide cutting tool will leave a better surface than a dull traditional tool will. For a lot of users however, a few extra minutes spent sanding is a good trade-off for the ease of use and the time saved over sharpening.

When turning synthetic material, such as a resin, carbide cutters excel. A sharp negative-rake carbide cutter will remove material in a controlled manner, and leave a smooth surface that takes little sanding.

A swan-neck hollowing tool can reach deep into hollow form vessels that would be impossible to hollow out with traditional cutting tools.

Illustrations: Bob Zimmerman

CARBIDE IN USE

As I eluded to earlier, I believe that the biggest appeal of carbide tools, especially to beginners, is the ease of use. With the tool rest at the correct height, they're straightforward to use. Push them into the wood and allow the carbide to do its thing. However, the shape of the cutter at the end of the tool will dictate what that tool is best suited for.

SQUARE CUTTER. Up to bat first is the square cutter, as seen in the top photo below. The square cutter is the roughing tool. In traditional terms, this is the spindle roughing gouge. When starting with a square spindle blank, such as in the photo, you can knock off the corners by working in small sections at a time. Personally, I start at the end closest to the headstock and push the cutter into the blank until it's round. Then, I go to the next half-inch (or so) section and round that. When the entire blank is round, I'll lock my fingers around the tool and tool rest and guide it along the blank to smooth out any uneven areas.

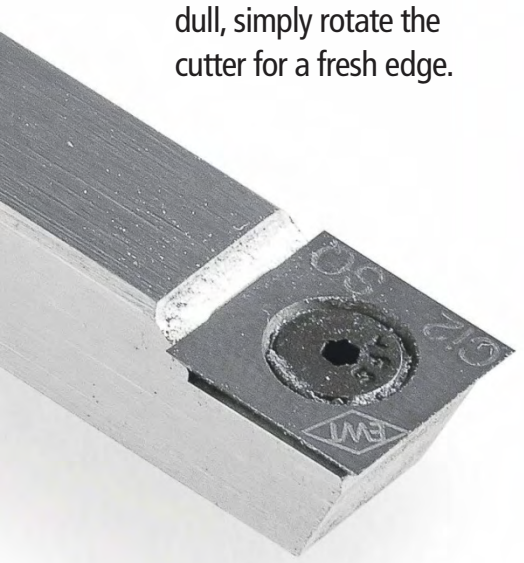

The square cutter features four cutting edges. After one edge is dull, simply rotate the cutter for a fresh edge.

For light cuts, gently move the tool along the tool rest. For removing a lof ot material, push the cutter into the blank, working in small sections at a time.

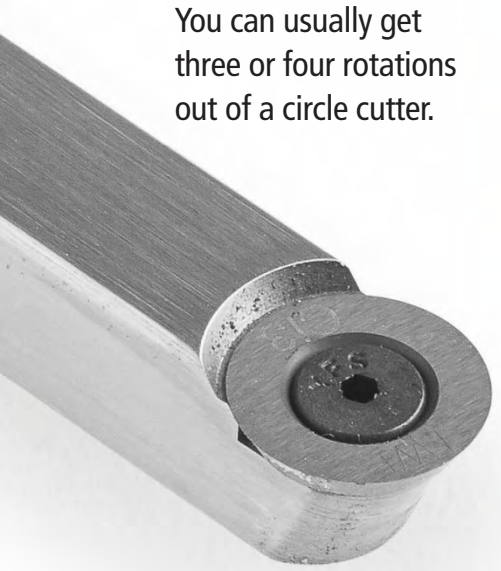

The cutting area of the circle is the front 90°. You can usually get three or four rotations out of a circle cutter.

Moving the round cutter in an arc is an easy way to create bead and cove details on a turning, such as this chisel handle. By making light cuts, the round cutter leaves a smooth surface.

ROUND CUTTER. The next tool, the round cutter, is in my opinion, the jack-of-all-trades. If I only had one carbide tool, this would be it. The cutter can hog away a lot of material to cut in details, such as the swell on the tool handle in the lower photo below. It can also be used with a light touch to make finishing cuts on your work.

Hollowing tools usually feature round cutters, as well. The long, straight hollowing tool shown in the main photo on page 10 has a small round cutter, and the swan-neck hollower discussed earlier has one, also. The round shape makes it easy to lightly blend transition areas, such as the bottom third of bowls and vessels.

DIAMOND CUTTER. The final tool in the carbide brigade is the diamond cutter, also known as the detail tool. This is shown in the upper photos on the next page. In traditional terms, this is similar to a spindle gouge or a point tool. It allows you to reach into tight areas and add details such as decorative lines or cut fillets.

NEGATIVE RAKE CUTTERS. As I mentioned earlier, negative rake cutters are often sold as an optional cutting tip for carbide tools. You can see a variety of these in the lower photo on the next page. The benefit of these are that they are less aggressive than regular cutters. Because the cutting edge is at a downward angle, the wood wants to push the cutter away from it. This makes it less aggressive and easier to control.

These work well for finishing and, in my opinion, work better than standard cutters when working with resins or plastics. I found the standard cutters to be a little too aggressive in my hands. The standard cutters, if fed too hard, liked to chip out the resin. Instead, the negative rake

cutters pulled fluffy ribbons of epoxy that left a glassy surface behind, needing little sanding.

SOME CONSIDERATIONS. Now, just because carbide tools are easy to use, don't get a false sense of security that they can't catch. You still have to pay attention to your work and keep a couple of things in mind. First, the tool bar must be held flat on the tool rest. If it isn't, the unsupported edge can catch. On the same note, if you're using the edge of one of the tools to cut, make light cuts. In my experience, if you use the edge to make a heavy cut, the leverage along the edge can cause the tool to want to roll.

Finally, the same rule applies to carbide tools as it does to high-speed steel — keep the tool rest as close to the work as possible. The further away from the work the tool rest gets, the more leverage is applied to the tool and the head will flex. *Easy Wood Tools* clearly marks their tool shafts with maximum overhang marks, which is helpful as you turn.

CARBIDE VS TRADITIONAL. So, are carbide tools for you? Maybe. There's something to be said for firing up the lathe and going to work instead of learning tool presentation and sharpening. (Although, you can touch up carbide — see the box below).

I personally don't think this is an either-or debate. I added a set of carbide to my traditional tools. And, I might even dare to say that I think even the most loyal traditional turners will find a spot in their shop for a quality set of carbide tools. W

The detail makes it easy to create small details like fillets, bevels, and lines. In a pinch, the detail tool also makes a good make-shift parting tool, allowing you to part off a project.

The detail tool allows for finer cuts and adding embellishments to a project.

Easy Wood's patented negative rake cutters have a downward bevel along the cutting edge that "pushes" them out of the workpiece for a less aggressive cut.

A SECOND LIFE: SHARPENING CARBIDE

Diamond Sharpening Stone.
If you're the type of person that orders a new cutter before you need it, then I'd like to shake your hand. I usually discover that my edges are dull before I've ordered a new one, however. Luckily, as you wait on a new cutter to arrive, you can stretch a little extra life out of your carbide cutter with a diamond stone. By rubbing the top of a standard carbide cutter on a diamond stone, you can freshen up an edge. It won't be as sharp as a new cutter, but it's often good enough to get by until your replacement cutter arrives.

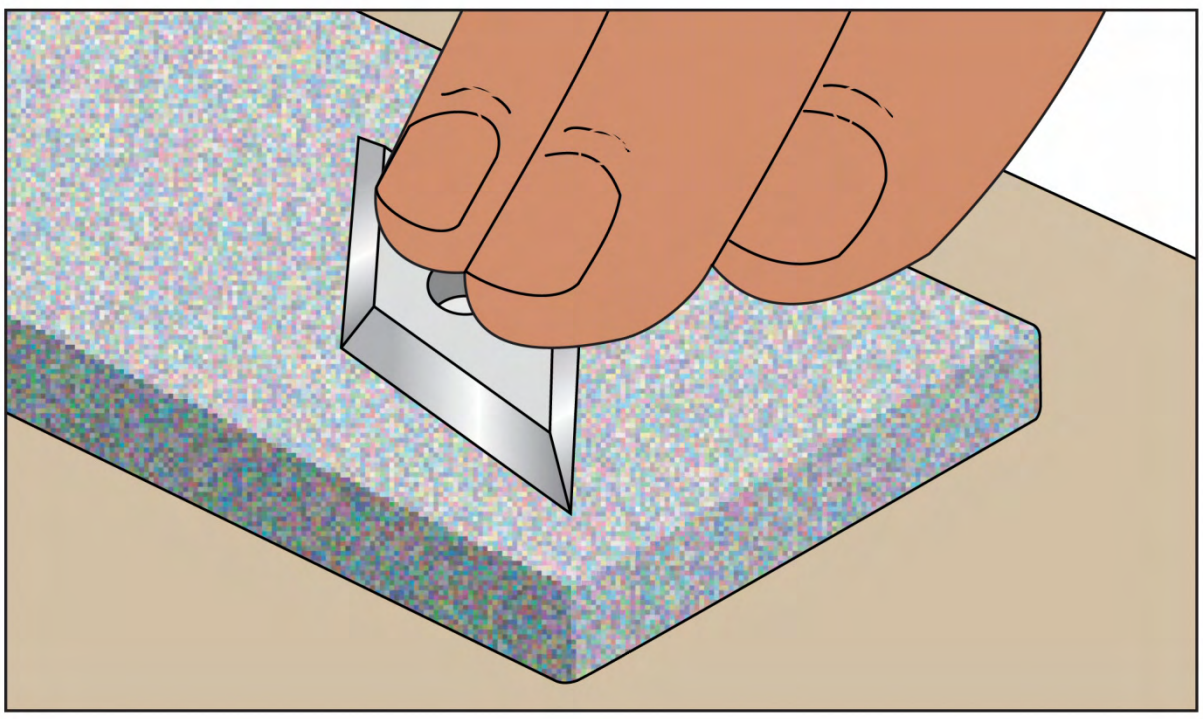

Wood Insert Joinery

An inexpensive jig and some dowels lets you create strong frames, case pieces, and even small tables.

Crafting joinery and connecting pieces of wood into larger assemblies is the part of woodworking I enjoy most. Learning different joinery methods can enhance your enjoyment of woodworking and even open up new possibilities.

I gravitate to a few well-practiced techniques as a result of this searching and learning. With this in mind, let's take a mid-level look at a joinery category I call wood insert joinery — dowels, biscuits, and dominos.

THE SPECTRUM. For a frame of reference, let's string out our options on a line. On one end are simple joints: nails, screws, glued butt joints. On the other end are more complex wood-to-wood joints like dovetails, mortise and tenon, half laps, etc.

Wood insert joinery lies closer to this traditional end. Project parts are joined with pre-made wood connectors that are glued into matching recesses. The learning curve is eased by relying on specialized jigs and power tools.

One benefit of all three of these options is that pieces are cut to size without needing to take the joinery into account. The applications for each of these methods overlap. So I'd like to help you sort out the advantages of

Written by: Phil Huber

each one. Oddly enough, each of these solutions also have attracted some criticisms. We'll look at those as well.

DOWEL JOINERY

We'll get the ball rolling with dowel joinery. It's the simplest and oldest of the three options. The process uses a jig and a hand drill to form holes in the mating surfaces of the parts. The photo on the bottom of the previous page shows an inexpensive jig that I've used with good success (refer to Sources on page 66).

REPUTATION. Unfortunately, this joint carries the stigma of low quality. I think it's a victim of guilt by association having been in the company of ne'er-do-wells like particleboard and flat-pack furniture.

On the other end of the spectrum, masters of the craft like the late James Krenov and Tim Coleman routinely use dowels in high-end furniture pieces. The difference in outcomes lies in minding a few key details: sizing, number, and length.

SIZING. A strong bond requires a snug fit of the dowel in the hole. So the first order of business is to select a drill bit that matches the size of the dowels. The jig matters, too. If the bit has too much play, the holes can end up wallowing out and be too large.

Speaking of sizing, larger dowels create stronger joints. The diameter of the dowel should be one third to one half the thickness of the part it fits into.

NUMBER. One road to stout assemblies is to maximize the glue surface. The way to accomplish this is to increase the number of dowels. One every 2" is a good starting point.

Dowels require precision in drilling for the parts to align. The more dowels, the greater the chance that small errors will add up to a misalignment.

LENGTH. Dowels are at their best when you use longer dowels in a joint. This increases the rigidity of the assembly. Clearly, there are limits here. I shoot for a dowel to extend at least 1¼" or more when drilled into the end of a rail. On the other side, a dowel should penetrate half to two-thirds into the width of a stile or the thickness of a panel.

FRAMES. Dowels are found in frames, cases, and chairs. But their speed and efficiency is best put to use in joining frame parts.

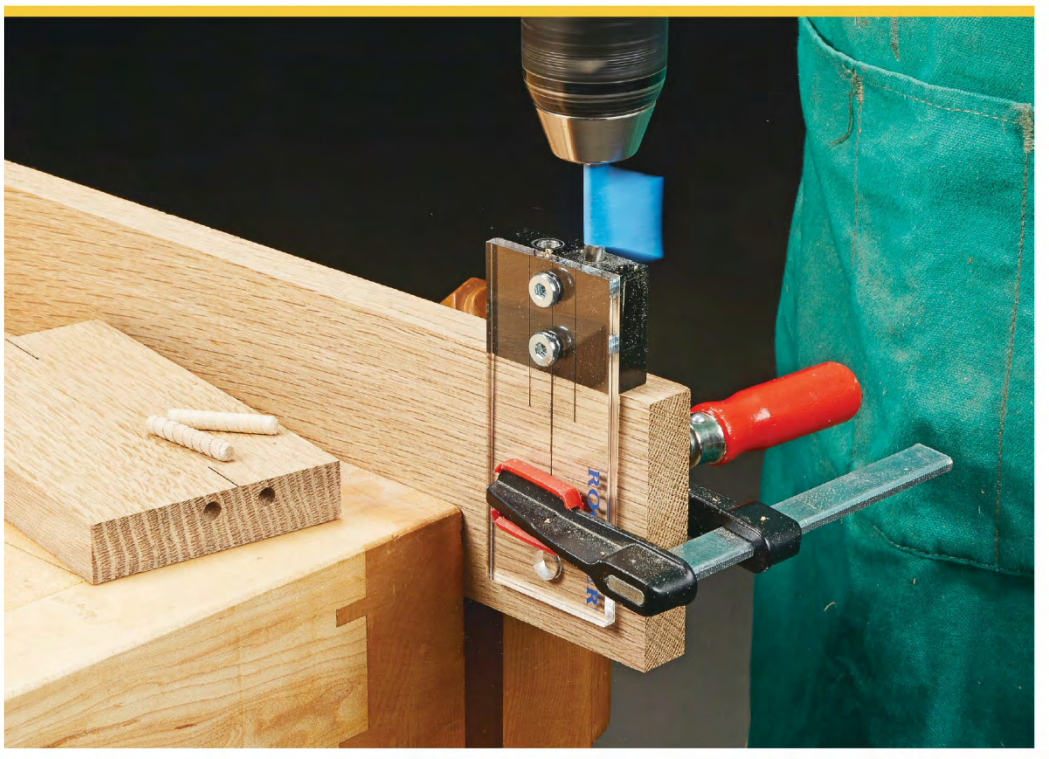

Dowels can be used to join a wide variety of project parts. But they excel when creating frame and panel assemblies, like doors. A simple jig and a drill are the only tools you need for success.

Learn from the sanding experts.

Buy from the sanding experts.

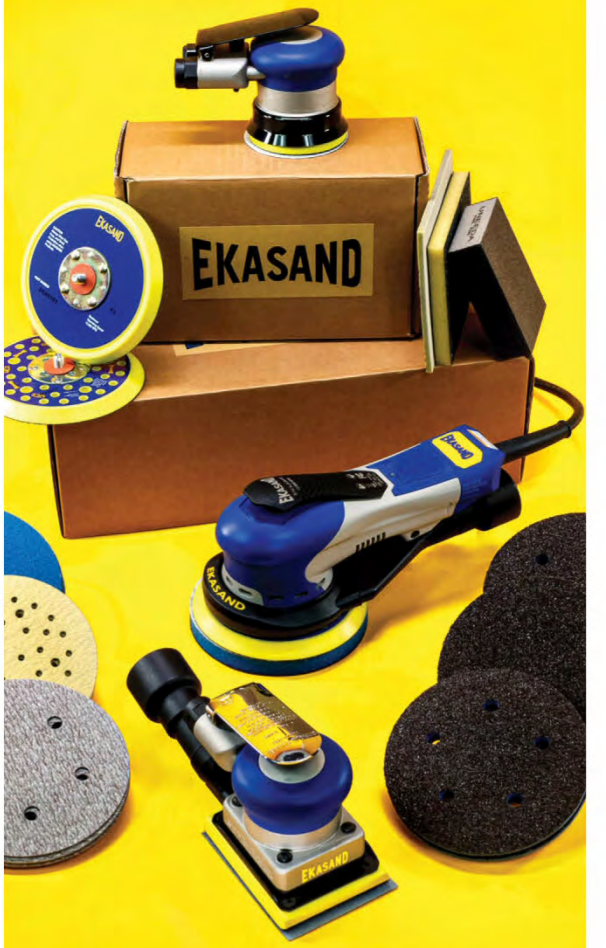

Get **20% OFF** your next purchase w/ promo code:

WSMITH20

Offer valid until 04/30/2021 only on our online store at shop.uneeda.com

www.uneeda.com

UNEEDA

YOUR TOTAL SANDING SOLUTION

Illustrations: Bob Zimmerman

Biscuit joiners use a small saw blade to scoop out a slot to hold the solid-wood biscuits. You can set the joiner to cut one of three sizes.

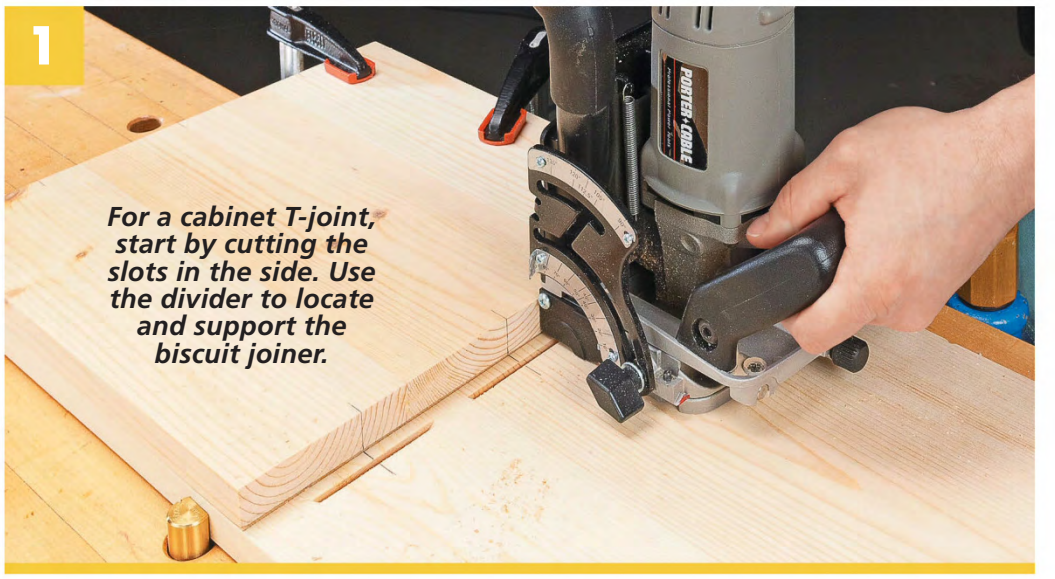

For a cabinet T-joint, start by cutting the slots in the side. Use the divider to locate and support the biscuit joiner.

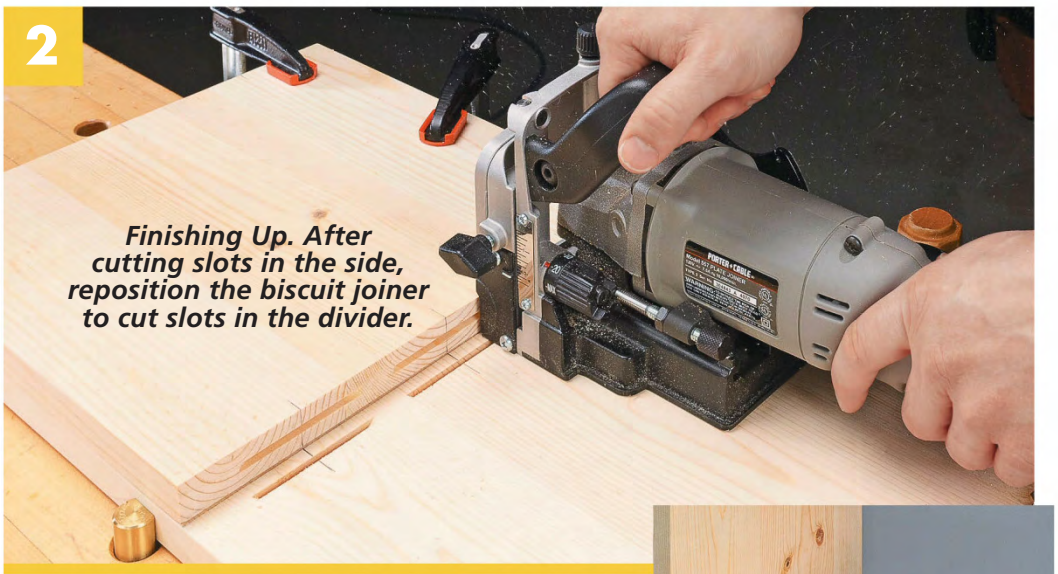

Finishing Up. After cutting slots in the side, reposition the biscuit joiner to cut slots in the divider.

Alignment & Strength. Biscuits are ideal for creating strong cases in both solid wood and plywood. Using the base of the tool as the reference surface makes adding dividers quick and easy.

BISCUIT JOINERY

Taking a step up the complexity scale, biscuit joinery offers several advantages. The blade of a biscuit joiner cuts a shallow, curved slot in each mating piece. A football-shaped biscuit is glued into the slot creating a solid connection. Think of it as a close cousin to using splines or tongue and groove joinery. Besides being fast, the joint makes aligning the parts a breeze.

FLEXIBLE PRECISION. The slots a biscuit joiner creates match the thickness of the biscuit for alignment. But they're slightly longer. This gives you some wiggle room for keeping edges and ends flush. As a side benefit, you still get great results even if you are less than precise in lining up the tool with your layout marks. When selecting the size of biscuit, always choose the largest one that will fit the width/thickness of the stock.

APPLICATIONS. If we stick with the tongue and groove analogy, you can connect the dots to find applications for biscuit joinery. The determining requirement is whether the workpiece can accept the slot without it being visible. Because of this, I find that biscuits aren't the best choice for frame and panel assemblies.

Where they do shine is creating cases in either plywood or solid wood. Plywood is notoriously inconsistent in thickness, so cutting snug fitting dadoes becomes an exercise in frustration. But with biscuits, a few quick plunge cuts keeps the project moving along.

Another place where biscuits shine is when parts need to align. For example in gluing up large solid wood panels or attaching edging to plywood panels. The biscuits keep reference faces aligned and saving you grief — and a lot of sanding.

REPUTATION MATTERS. Biscuit joinery rode an initial high wave of popularity, then it seemed to fade just as quickly. I think this was a result of its "do-it-all" claims. For those who take the time to learn the strengths, biscuit joinery makes a lot of sense.

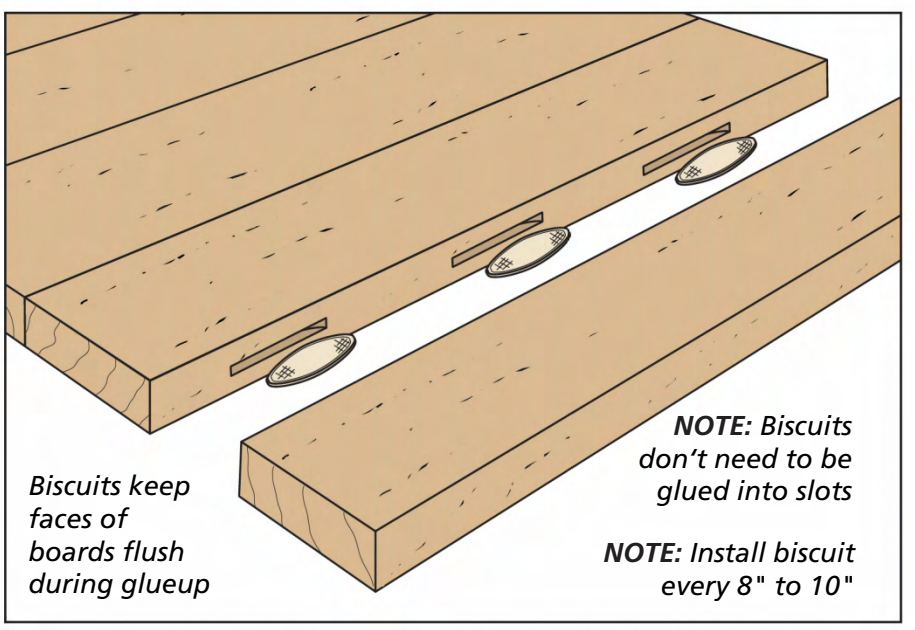

Solid Wood Panels. Large panels can be tough to glue up flush. To minimize planing and sanding, add some biscuits to keep the boards level prior to assembly.

SHAPER

ORIGIN + WORKSTATION

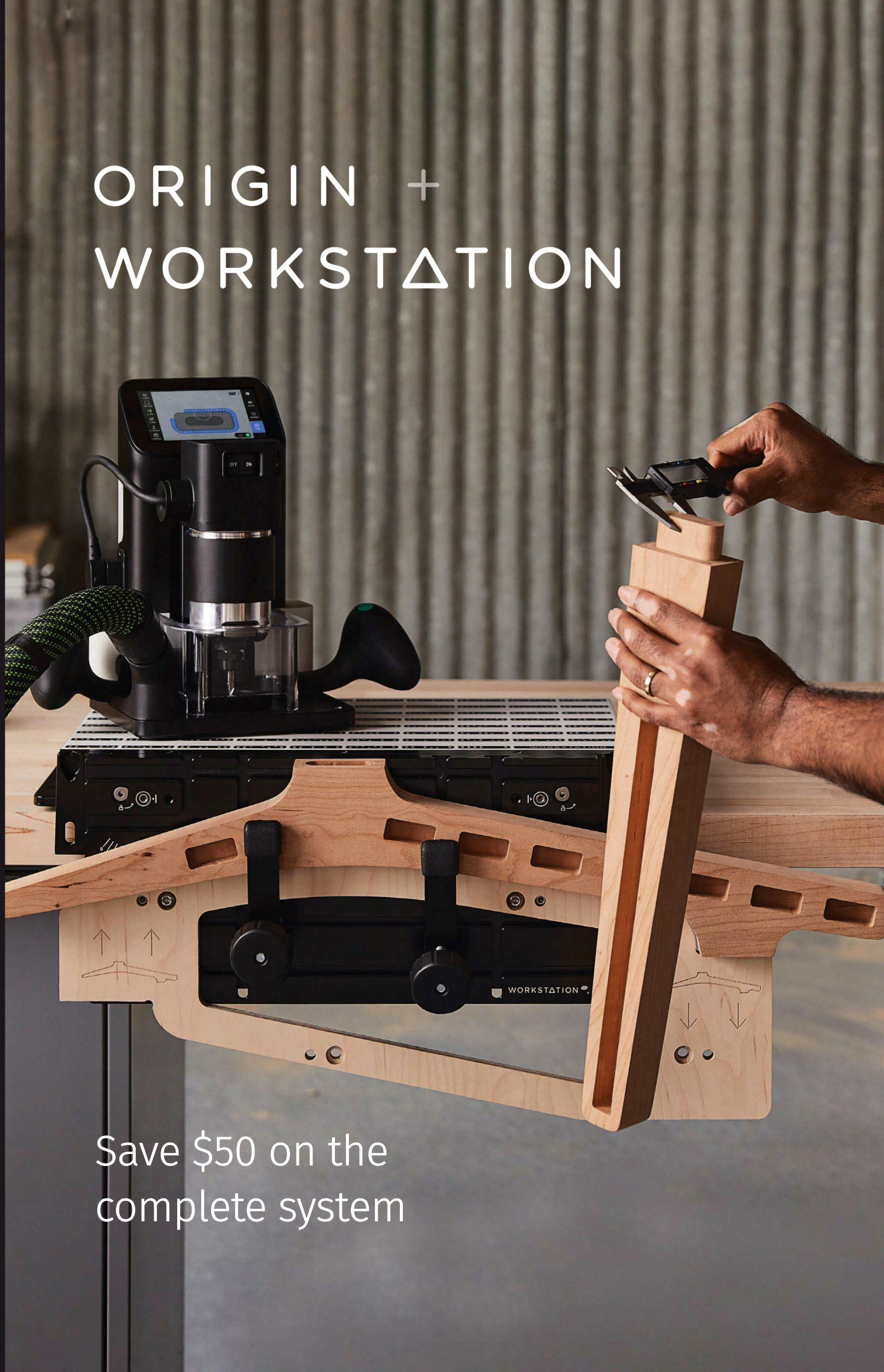

Save $50 on the complete system

shapertools.com

The *Festool* Domino joiner works like a cross between a plunge router and a biscuit joiner. The spiral bit spins and oscillates side to side to create an elongated mortise.

To create a domino mortise, you line up the center of the tool with a centerline marked on the workpiece. Plunge the bit into the workpiece until you contact the stop, then retract the bit.

DOMINO JOINERY

You'd be forgiven if the power tool shown above caused you to do a double-take, thinking it was just another biscuit joiner. That similarity ends when you check out the bits and connectors it uses in the photo below.

The *Festool* Domino joiner (I'm showing the smaller *DF500* in this article) combines the practicality of a biscuit joiner with the robust durability of loose tenons.

Loose tenon joints are usually created with a router jig and custom made tenon stock. With the domino, the machine cuts mortises in a limited range of sizes. Then at assembly time, you just plug in pre-made tenons (dominos) to join the parts.

The dominos are designed for a snug fit in the mortises. You do have the option for creating mortises that provide some side-to-side movement to align parts.

WHAT IT'S GOOD FOR. Let's go back to the three types of assemblies we've been considering: frame and panel, plywood casework, and table-type bases. Just like dowels and biscuits, there's nothing stopping you from using dominos on any of these construction types.

The ability to change bits and size the joinery to suit the material makes it the most versatile of the three joinery options. Based on my experience, I find this joinery is best suited for making bases. Beyond tables, it's the kind of structure you find in stands, dressers, buffets, and even shop carts.

Another good application is when you need to build doors that incorporate solid-wood panels. Here you can't glue the panel in place due to seasonal changes in humidity. So the corner joints bear all the stress. Thicker, longer dominos will handle that better than dowels or biscuits.

GREEN FEVER. I hesitated including domino joinery in this article since only *Festool* makes the tool. But not including it seems like a deliberate exclusion.

Festool aficionados trumpet the quality and performance of anything with the green label. While detractors consider their products overpriced, over-engineered solutions in search of a problem.

I get it. The domino is a sweet tool, but it's targeted at professionals whose time is money. Hobby woodworkers who may have a much smaller budget for specialized tools, may balk at the buy-in price of over $1,000.

MAKING DECISIONS. Woodworkers often are tempted to compare tools and techniques looking for the "best." It's a false competition and way too loaded with subjective values.

Dowels, biscuits, or dominos can simplify your joinery process. Your choice depends on the work you do, your budget, and need for speed. After that, it's a matter of taking the time to master the tool in order to make your projects the best they can be. W

The DF500 joiner accepts 4mm, 5mm, 8mm, and 10mm bits (right to left). The sizes of domino tenon for each one is shown next to the bit. The dominos are made from beech for tenon-like strength. Refer to Sources on page 66.

The Best is Now Even Better...

Woodpeckers®

Slab Flattening Mill·PRO

NEW TOOL

Carriage moves to 5 positions in seconds. *(3 shown)*

Wider, Thinner, Thicker & Cleaner...

Woodpeckers Slab Flattening Mill·PRO has all the best features of our original Slab Flattening Mill, but with a new router carriage that has an amazing range of adjustment, working with stock as thin as 3/4" and up over 3" without spacers or shims. Dust collection is now built right into the carriage with twin collection ports that collect equally well on push or pull cuts. We reinforced the frame of the router carriage for even better surface flatness and finish.

Like the original, the Slab Flattening Mill·PRO and your router can surface irregularly shaped and twisted slabs into stunning table, counter and shelf surfaces. With a standard width capacity of 48-1/2" and optional extensions available, there's no slab project you can't master.

Learn more about Woodpeckers Slab Flattening Mill·PRO at ***woodpeck.com***

Woodpeckers, LLC • Strongsville, Ohio • 800.752.0725 • ***woodpeck.com***

Casting Wood & Resin

By now, I'm sure you've seen some form of "river" furniture — epoxy blended with wood to create a piece of furniture. That idea is often used in wood turning, and is what we used for the martini glasses on page 22. Here, I'll guide you through creating these amazing, wood and cast resin blanks.

STABILIZE FIRST. To get the best casting possible, it's best to stabilize the wood you'll be casting. Stabilizing fills the cells of the wood with a resin to keep it from expanding and contracting. It also makes it a little easier to turn, in my opinion. To do this, start by baking the wood at 220° for 24 hours. Allow the blank to cool in a sealed bag. This removes almost all moisture from the wood.

VACUUM. The dry wood can now be put in a special vacuum chamber and filled with *Cactus Juice* stabilizing resin. The pressure differential caused by hooking up a vacuum pump causes the wood to soak in the resin. After soaking, it needs to be cured. This is done by baking it in an oven at 200° for a few hours (wrapping the piece in foil contains excess resin during curing). When cured, the blanks can be used as-is, or be cast with resins for a larger, hybrid blank.

Stabilize The Wood. Apply vacuum until bubbles stop coming out of the blank. Allow the blank to sit in the resin for a couple of days to maximize absorption.

Cure the Blank. Cure the blanks by placing them in an oven at precisely 200°. Too hot and excess resin will leech out. Too cool and the resin will not fully cure.

Written by: Logan Wittmer

CASTING THE STOCK

To cast the blank, you need some form of mold. Plastic paint containers work well, but you can also screw together molds out of laminate or HDPE plastic. Wood will float in the *Alumilite* resin, so use some hot glue to hold the blank into the mold (Photo 3).

MIX THE RESIN. Mix up equal parts of the resin (by weight). For this large of blank, I'm using *Alumilite's* "Slow" cure. Standard resin would create too much heat and would crack the blank. Pour it into the mold but don't worry about bubbles at this point.

UNDER PRESSURE. Quickly place the mold into a pressure pot (Photo 5). Mine is a cheap paint pressure pot that's capped off. When you have the lid sealed, apply 40-50 pounds of pressure (Photo 6) and let it sit for several hours. The pressure will compress any bubbles in the resin so they become invisible (like a soda bottle's carbonation before being opened.) When you remove the blank, it should be crystal clear and ready to work.

MIX IT UP. While our resin here is clear, you can add different effects to it, such as dyes, mica powders, or even glitter. In my experience, funky pieces of wood work the best in this process. Burl caps, burls with voids, or punky wood are some of the best. Anywhere the resin and wood will meet makes an interesting effect. While some of this may not be stuff you use every day in your shop, it's a rabbit hole once you get started. W

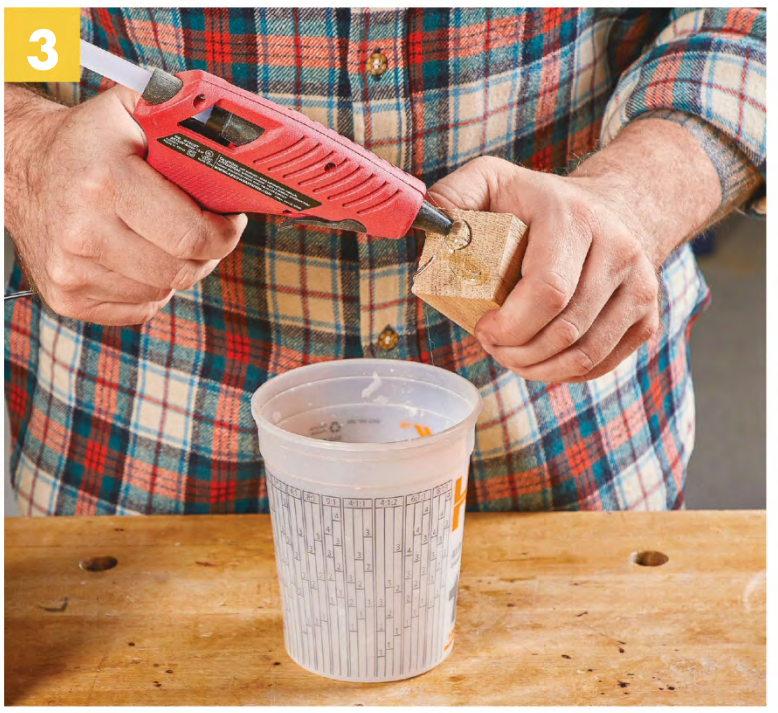

Glue the Blank. Keep the wood from floating by sticking it in place with hot glue. A squirt here or there is all you need, just make sure it's in a place you'll turn away.

Pour the Resin. Measure the resin by weight. Standard *Alumilite* can be used with smaller blanks, but larger blanks require slow curing resin to reduce heat buildup.

Add Pressure. A pressure pot compresses any bubbles in the resin to a microscopic level, so the final product will be crystal clear and bubble free.

Cure the Blank. Apply pressure until the blank is cured. Curing can take from 1 hour to 6 hours, depending on the resin used and the size of the blank being cast.

Martini Glasses

Add one part maple burl cap, one part resin, and pressurize until cured. It may not be a martini recipe, but they are the ingredients for this fun turning project.

It's no secret that I've taken a head-first dive into turning over the last few years. So when we had an upcoming lathe project, these martini glasses, I was excited to work with the designer, Dillon Baker, on the process. The glasses you see here are the result of our brainstorming. These martini glasses are a blend of casting resin and pieces of maple burl cap. The effect, in my opinion, is striking. The stepped design Dillon turned into the base and the funnel really sets them apart.

The Cabinetmaker

CUISINE AT HOME

6 OZ GIN*
2 OZ DOLIN DRY VERMOUTH
2 TSP OLIVE BRINE
1-2 FETA STUFFED GREEN OLIVES
1 SPRIG OF ROSEMARY

Add gin, vermouth, and olive brine in a cocktail shaker or glass filled with ice. Stir until cold. Pour into two martini glasses and garnish with feta stuffed olives and a sprig of rosemary. Serve under a glass jar with a smoking piece of oak.

**Try a dirty martini with a barrel aged gin for a fun spin on the classic.*

Written by: Logan Wittmer; Project Design: Dillon Baker

Stem or NO STEM

Even though we have two different glass designs here, a stemless and a stemmed version, the process for making them is nearly identical. First, you'll need to start off with a blank. You can see the outline of our blank here. Page 20 has more info about the process of creating the hybrid blanks. If you don't want to make your own blanks, you can do an internet search for "hybrid turning blanks" and you'll find many people who sell premade turning blanks like this.

FUNNEL FIRST. Creating the funnel is the same process on both glass styles, so I'll hit some of the general highlights. Traditional turning tools work on casting resin, but I personally prefer negative rake scrapers for synthetics. You can read more about these on page 10. You'll want to use a large set of jaws in your chuck while you turn these. A 4" set of jaws was about perfect for everything on these glasses. Finally, don't get too caught up on the shape or size — they're just guidelines after all.

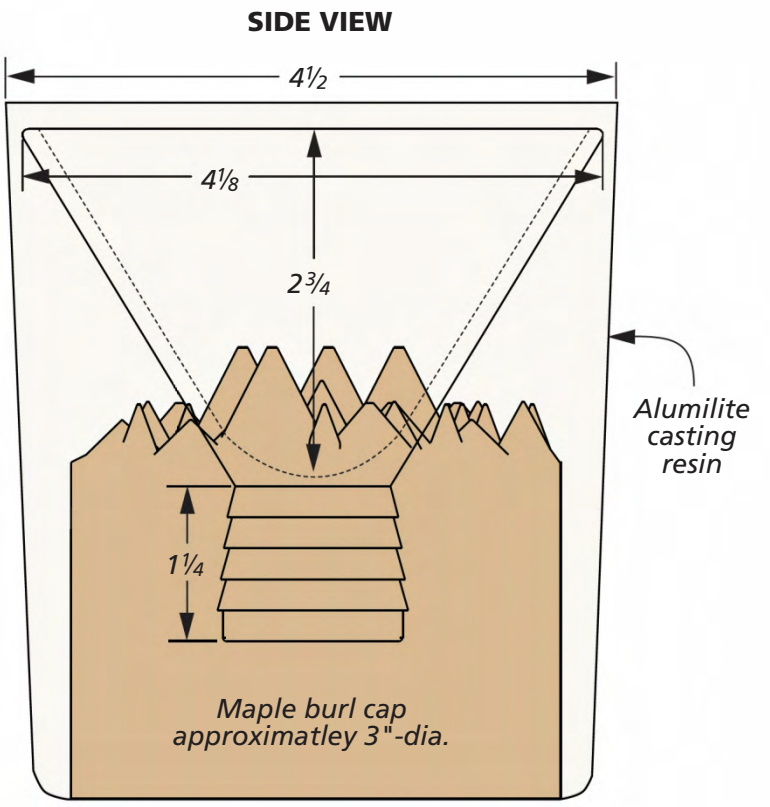

CREATING THE FUNNEL

Depth Hole. Use a Jacobs chuck and a drill in the tailstock to drill into the blank. This sets the target depth for the inside of your funnel. Use a fairly large bit — about ⅝" works well.

Guideline. Measure and use a marker to draw a line where the bottom of the funnel will be.

Start The Hollowing. Working from the center out, start hollowing the funnel with a square carbide tool. A very light touch will cut beautifully, while a heavy cut will chip the resin.

Straight Cut. When you're down to depth, use a round cutter to make a finish cut inside the funnel. Make light cuts in a perfectly straight line from rim down to the center point of the funnel.

Illustrations: Becky Kralicek

CREATE A CLEAR FINISH

Stepped Outside. Working in small sections at a time, start along the rim and turn the walls down to the final wall thickness. Finish along the waist of the glass before making smoothing cuts.

Wet Sand. Foam-backed sanding pads in fine grits are exactly the thing that's needed when finishing high-gloss items such as these glasses.

The OUTSIDE SHAPE

After the inside of the funnel is done, you can flip the tool rest around to the outside. You're shooting for a thin, even wall thickness. To keep the turning strong, step the funnel down in half-inch sections at a time. This leaves the bulk of the waste in place and adds rigidity to the turning as you work. Also, I found keeping the lathe speed up helps provide a smoother cut. Somewhere in the 1900RPM range seemed about right for my carbide tools.

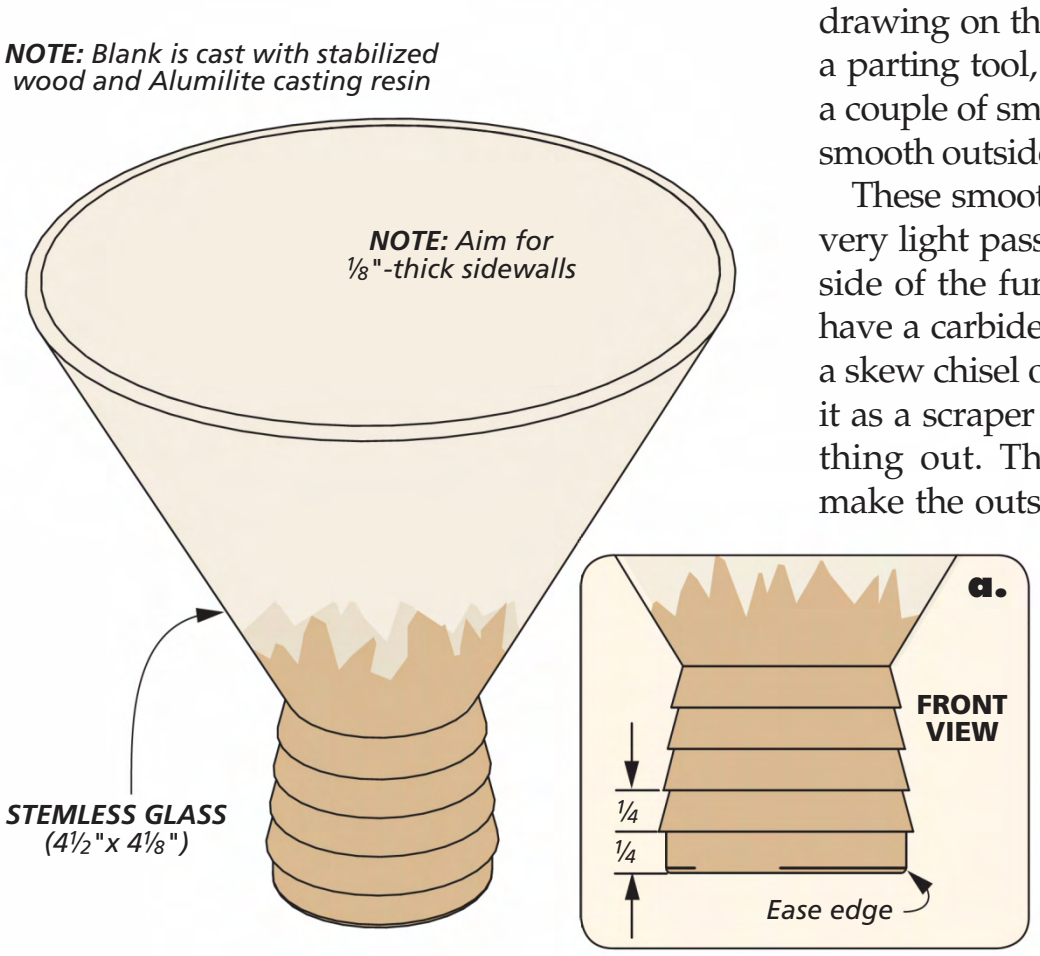

SMOOTHING CUTS. After you have a fairly even wall thickness down to the waist, you're ready to make decorative tiers (see the drawing on the next page) with a parting tool, or you can make a couple of smoothing cuts for a smooth outside, as you see here.

These smoothing cuts are just very light passes down the outside of the funnel. If you don't have a carbide tool, you can lay a skew chisel on its side and use it as a scraper to smooth everything out. The straighter you make the outside of the funnel, the better it will look. Before we tackle the base, let's get that resin finished.

SAND IT SMOOTH. The key to a crystal clear finish on casting resin is to sand it properly. I wet sanded from 120-grit to 600-grit with wet-dry sandpaper. Then, I turned to my *Micro Mesh* sanding pads from 1500-grit to 12,000-grit again, keeping everything wet (this is important with resin).

Finally, as a last step, I used a plastic polish designed for turners. Rub it on with the lathe off before turning the lathe on to buff it out. The more time you spend going through the grits, the clearer the resin will be. However, you can get some interesting frosted effects by stopping around 600-grit. Just play with it.

TURN THE BASE. If you're doing the stemmed version, you can go to the next page. For the stemless version, simply reverse the blank in the jaws and bring the tail stock up to give a little additional support.

If you don't have 4" jaws, you can make a jam chuck out of a scrap of wood mounted to a faceplate. Use a parting tool to cut a groove in the scrap. You want the glass rim to be a snug, friction fit when you press it into the groove. Now, you can turn the base to whatever shape

TURNED BASE

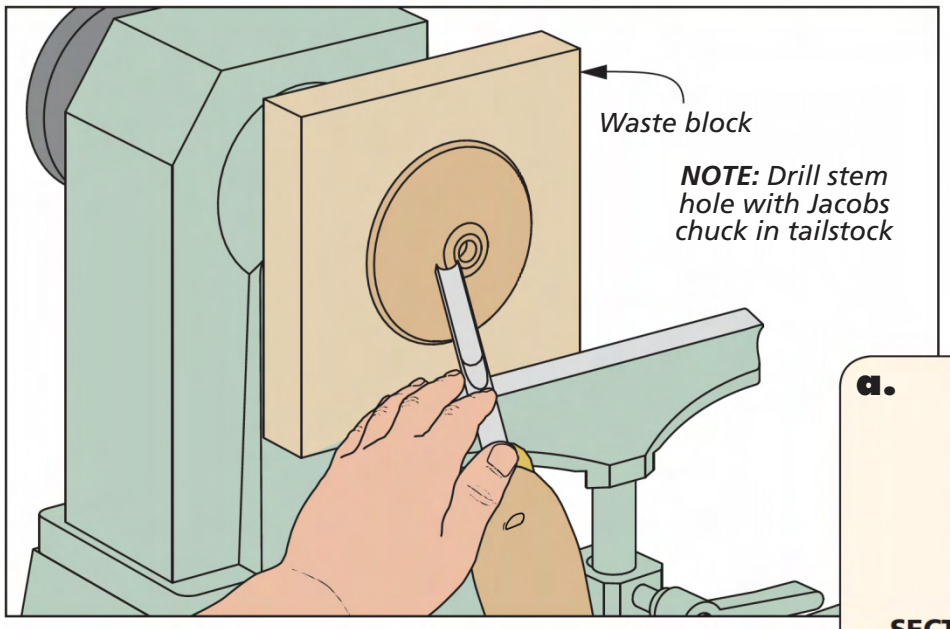

A Tricky Hold. A scrap block attached to a face place is the perfect way to mount a small blank for the base. Use a couple of beads of hot glue to mount the blank.

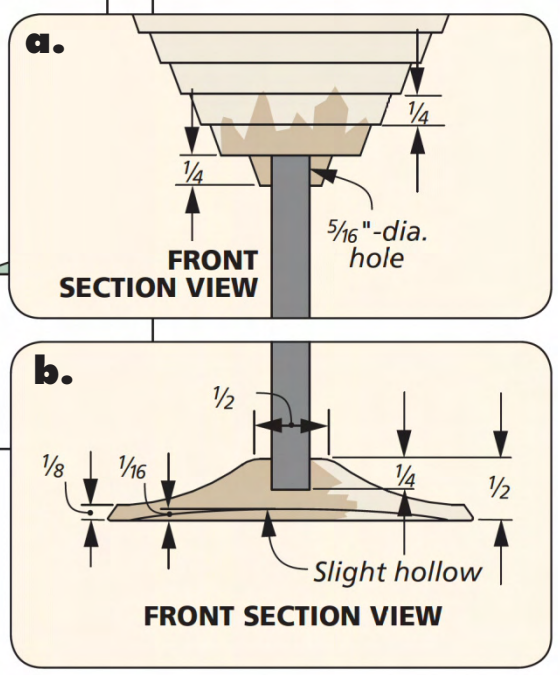

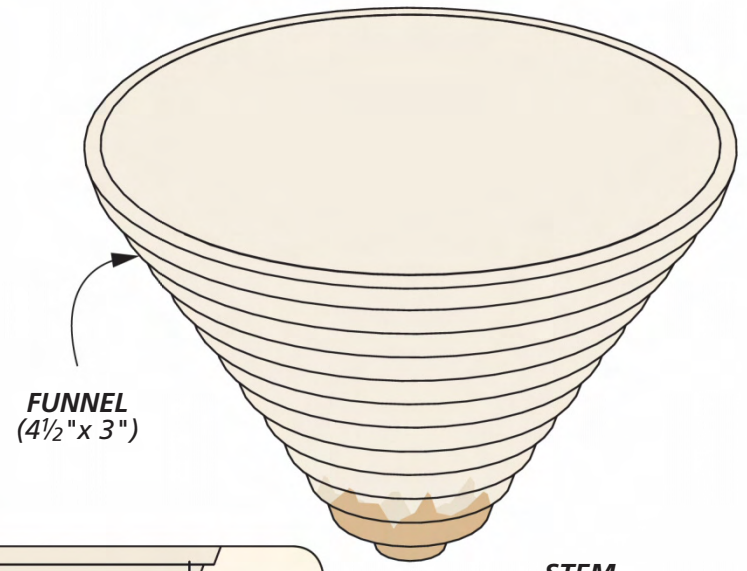

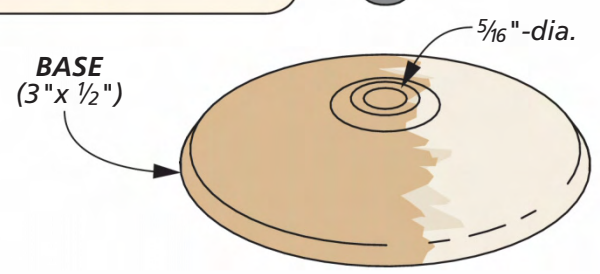

you'd like. The tiered base here is made using the parting tool to make the steps. Then, the same process can be used for sanding the stabilized wood before applying an oil finish.

ADD A STEM

For a traditional style martini glass, make a funnel like before, but part it off after the sanding is done. Reverse it in the jaws and use the Jacobs chuck in the tail stock to drill a stopped hole for the stem. Don't go too deep, or you will have actually made a fancy turned funnel instead.

MAKE THE BASE. Unlike the integrated base on the stemless glass, here you'll want to make a separate base. As you can see in the main photo on page 22, ours is another piece of hybrid casting, but you could use a piece of solid wood for this.

Start by mounting a scrap block on a face plate. Then, use hot glue to hold your blank on the face of the block. After mounting it to the lathe, turn the base round and into the shallow ogee profile that you see in the drawing above. The base's highest point will be the center where the hole will be drilled, and there is a smooth transition down to the bottom.

After the shaping is done, use the Jacobs chuck to drill the stem hole in the base. Then, you can remove it from the scrap block using a heat gun to soften the hot glue.

HOLLOW THE BOTTOM. To add a little stability to the glass, I chose to hollow out the bottom of the base. This allows it to have a good, positive resting point when you set it down. You can either do this by hand sanding, or by placing the base in the chuck jaws and turning it. If you hold it in the jaws, use some painters tape to protect the edges of the base.

ADD THE STEM. The last thing to take care of is to cut the stem to join the funnel and base. This is made from aluminum and is simply cut to size. I added a coat of black paint for a little contrast, but it would look good as bare metal as well. When it's ready, epoxy it in the base and funnel.

After wiping on a little mineral oil to darken the wood, it's time to turn back to page 22, and take a look at the recipe for the *Woodsmith* signature cocktail — The Cabinetmaker. Now you can sit back, sip your drink, and enjoy, my friend. W

Materials & Supplies

- Stemless glass requires a blank that is 4½" dia. x 5" long
- Stemmed glass requires a blank that is 4½" dia. x 4" long. Base needs to be 3¼" dia. x ¾" thick. Stem is 5/16" aluminum

Written by: Erich Lage; Project Design: Chris Fitch

Patio Planter

This outdoor project will throw you some fun curves in the shop. Once the planter is complete, it's the perfect choice for showing off your gardening prowess.

▲ The bottom of the planter is made from the same material as the sides — cypress. The stave construction allows you to make a beautifully round planter out of tapered and beveled boards.

▼ A shop-made copper hoop adds some sparkle and shine to the planter. Making the hoop and adding the surface texture is a refreshing break from wrestling wood.

It seems that whenever you want to make a replica of an existing piece, even something as simple as a barrel, there can be lots of upfront work to do. Most of that work has to do with measuring parts exactly and keeping track of how they interact. But that's just not the case with this little gem.

This planter is made out of cypress, and has the look of a barrel that's been salvaged from a previous life and resurrected for a new duty — holding floral decorations in the corner of your patio. Which is a perfect use for cypress. Cypress is easy to work and is a durable option for fences, patio furniture, and birdhouses. You know, outside stuff.

If all those angles you see in the upper inset photo have you scratching your head, not to worry. There's a jig that makes the process as smooth as silk. In fact, other than at the start, you'll find that you're not going to need measuring tapes or rulers hardly at all with this project. A lot of what happens here falls in line with the "build-to-fit" philosophy. You'll make the barrel parts and then dry assemble them to find the size of the bottom. Then, use the completed planter to size the hoop.

The copper hoop on the planter is an homage to the steel "quarter" hoop you would see on an oak whisky barrel. Our version is purely cosmetic. It takes a little work to make, position, and fit the hoop, but it adds a lot to the look of the planter and is a fun side trip from making wood chips in your shop.

Illustrations: Bob Zimmerman

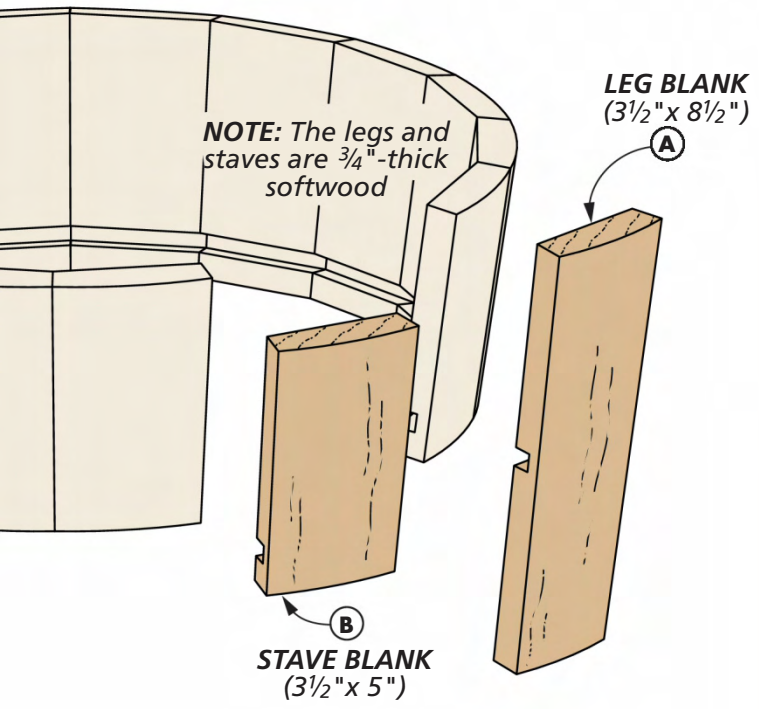

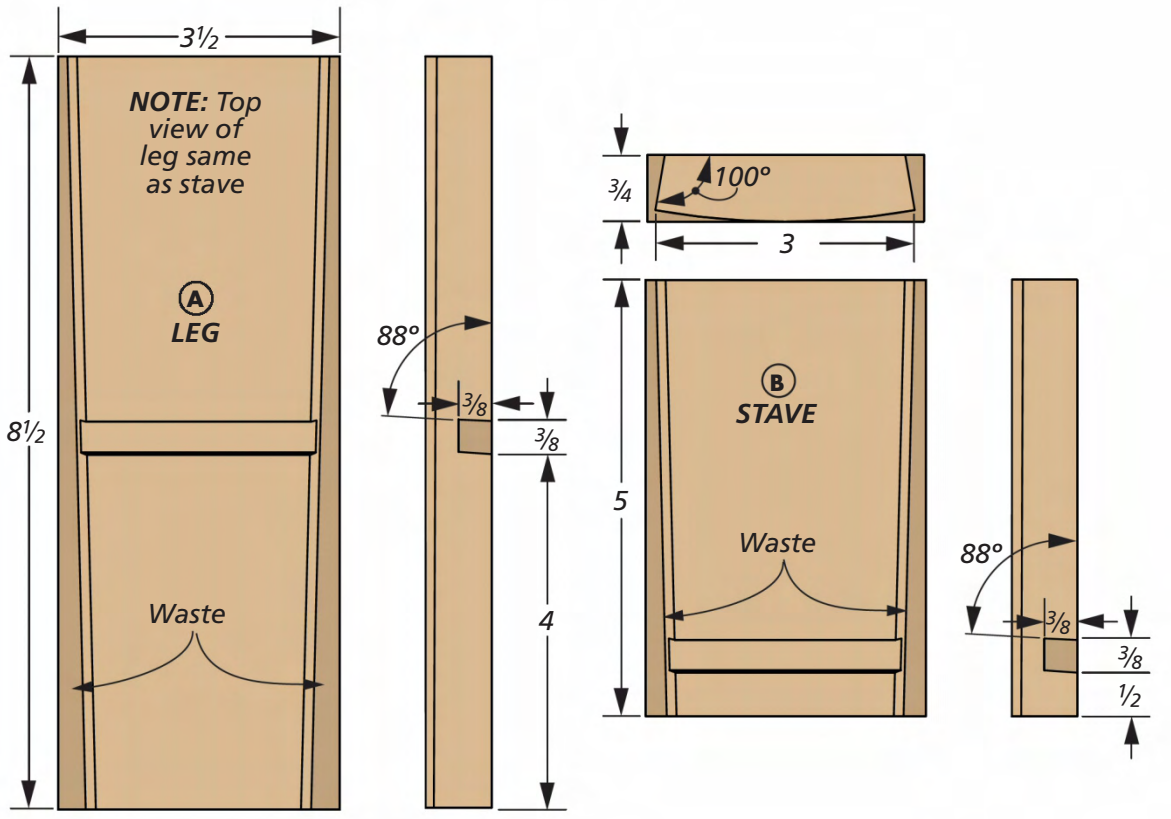

The LEGS & STAVES

As the drawings above show, the body of the barrel consists of two parts — the leg and the stave. The leg is the longer of the two and it does what legs do — lift the planter off the ground and provide ventilation for the underside. The shorter staves make up the sides of the planter. There are five staves between each leg to keep the barrel balanced.

OVERSIZED BLANKS. The details above show that the parts are cut to their final length, but left wide for the moment. Also, the top and bottoms of the pieces are left square. You could say leaving them so adds to the rustic charm of the planter, instead of doing the work of beveling the ends.

DADO FIRST. The drawing below shows the next step. To hold the bottom in place, you need a dado in all the pieces. You'll need to account for the tilt of the barrel's sides when cutting the dado. Detail 'a' shows how to set the dado blade before making the cuts.

To make sure the staves and legs align at the top, cut a test piece after resetting the fence. When you're satisfied that they match, finish cutting the dadoes in the remaining pieces.

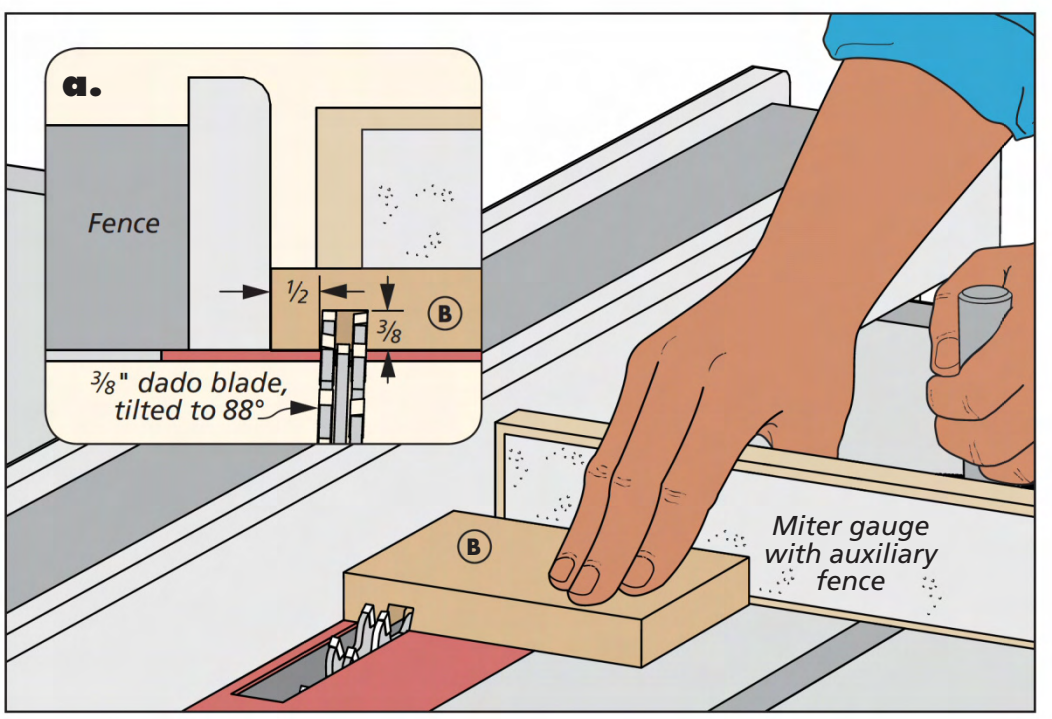

Dado for Bottom. A dado blade in your table saw and an auxiliary fence attached to your miter gauge lets you cut the dadoes in the leg and stave blanks. Then you can move on to tapering the parts.

CREATING THE JIG

The jig you see on the next page is designed to cut the taper and the bevel on both the legs and the staves. You're going to use both sides of the jig to shape the parts. First, you need to make the base.

To begin, set the blade on your table saw to 80°. Figure 1 on the next page shows this step. Now use your rip fence to cut the base width (about 2½ times the width of the leg). In the upper corner, mark this as side 1.

LAST OF THE LAYOUT. At the beginning of this article, I mentioned that you won't be using your measuring tape or ruler a lot on this project, you're coming up on that milestone now. Figure 2 shows the leg blank marked up and ready for the jig.

The next two figures show you how to locate the stops on the jig using the leg blank you just marked up. It starts with Figure 3, you're setting up the jig stops to cut the left side of the leg. When the glue on the stops set, trim that side of the workpiece.

Now flip the jig to side 2. Spin the workpiece 180° and set the stops for the right side of the leg

(Figure 4). Then, at the table saw, make the second pass, defining the right side of the leg.

THE STAVES. Although the jig was created using the legs, it works just fine for the shorter staves. It's a good idea to mark the tops of the staves the same way you did the legs, just to keep track of the progression.

I cut all the left sides of the staves (Figure 5) before spinning the jig and staves (Figure 6). Now it's back to the bench to make the planter bottom.

MAKING & USING THE JIG

1

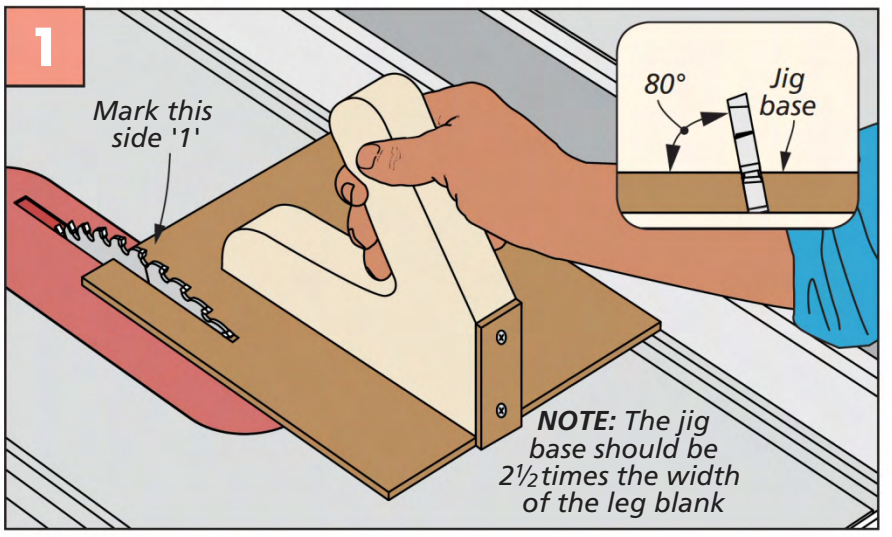

Size the Base. Start with a piece of hardboard that is longer than the leg blank and more than twice the width of the blank. Set the saw blade at 80° and rip the first edge.

2

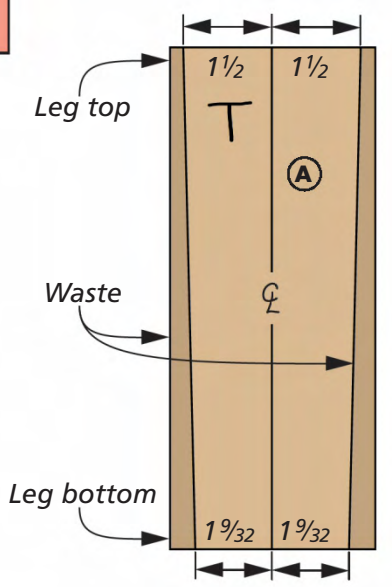

Layout the Leg Blank. On an extra-wide leg blank, draw a centerline. Measure and mark the width of the top and bottom of the leg. To layout the outside edges, draw a line between the two marks.

3

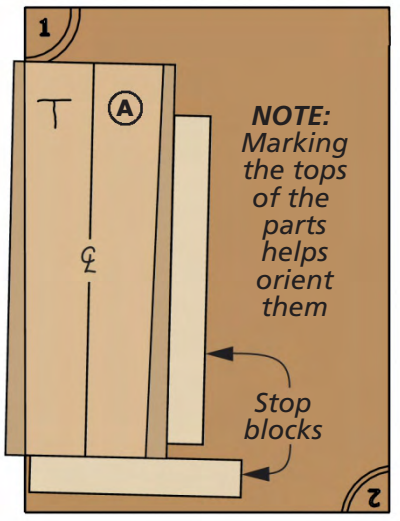

Fitting Side One Stops. Align layout marks with the beveled edge of the jig base. Hold the blank in place and glue the stop blocks to the jig base. When the glue is set, make the cut.

4

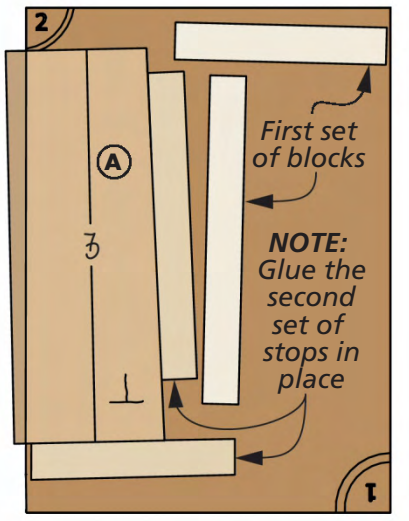

Fitting Side Two Stops. Spin the jig and the workpiece 180° and align the other layout marks with the edge. Position the stop blocks against the leg and glue them in place. Then make the second cut.

5

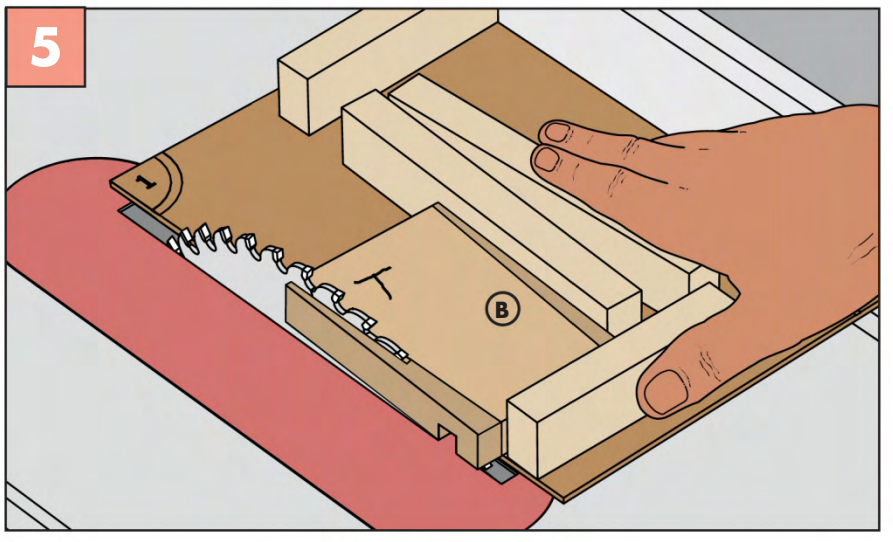

One Jig for Both Pieces. After cutting the tapered and beveled sides of the legs, repeat the process for the staves. Cut all of the left sides first.

6

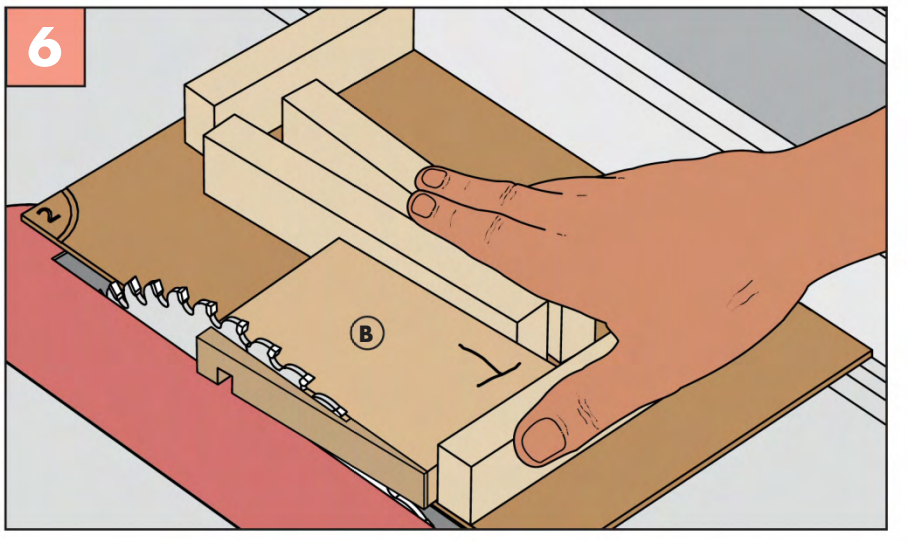

Spin & Repeat. The routine for the staves is the same as the legs. Turn the jig and the stave 180° to taper and bevel the right side of the stave.

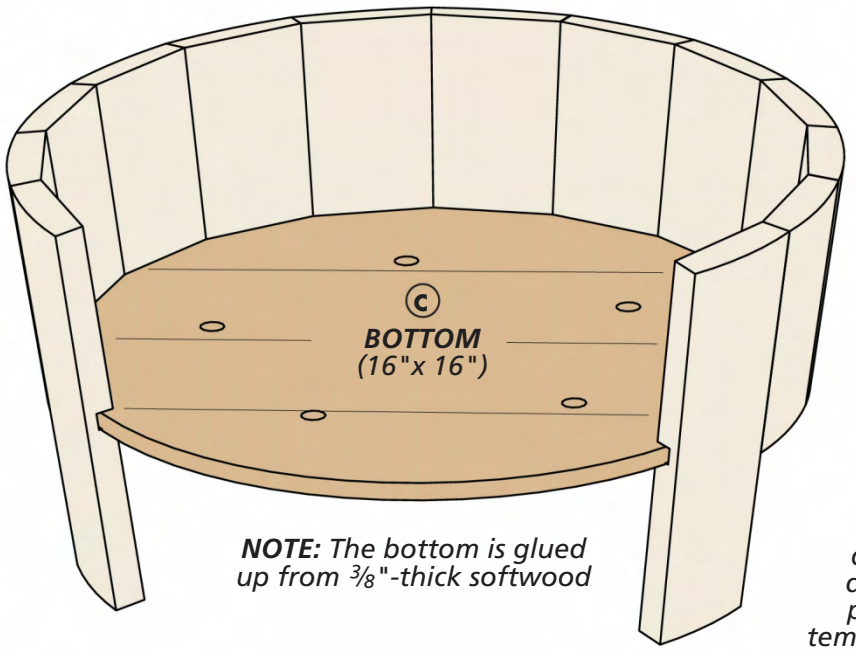

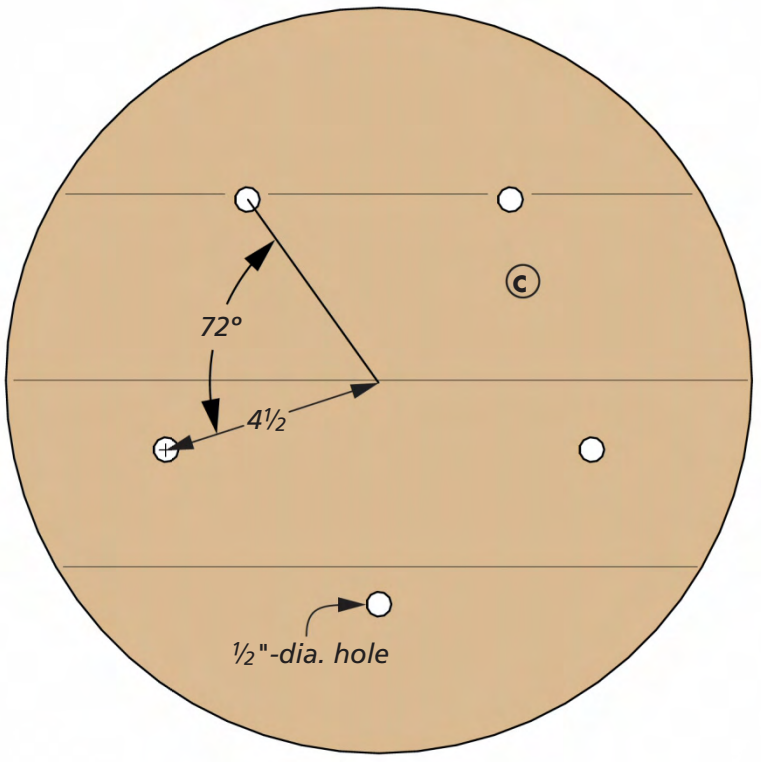

NOTE: Actual diameter will be determined after parts are cut and temporarily assembled (see box below)

The BOTTOM & THE HOOP

The bottom is made up of cypress boards that are planed to thickness, then glued up. After creating the round profile to fit in the dadoes, you'll need to drill some weep holes for drainage.

GLUE UP. Thin material can buckle easily when clamped up. So, clamp lightly and check that the bottom is flat before the glue sets. If problems arise, you can clamp cauls across the boards to hold them flat.

SHAPE THE BOTTOM. To arrive at the final size of the bottom, I did a dry assembly of the planter barrel like you see in the box below. Then, to create that shape, I used a trammel and my router to cut out the bottom. Note the foam board that protects the bench.

GO TIME. A slow-set waterproof glue is best to use when you have a lot of parts to glue up. Eighteen pieces mean 36 edges, so this job easily qualifies for that. One consolation is that the bottom of the planter floats in its groove so there's no glue to worry about applying there.

SMOOTHING THE PLANTER. Rounding the barrel's surface is a great excuse to play with planes, spokeshaves, and maybe a scraper or two — goldbricking never felt so good. Just take your time in the early stages to avoid tear out.

MAKE THE BOTTOM

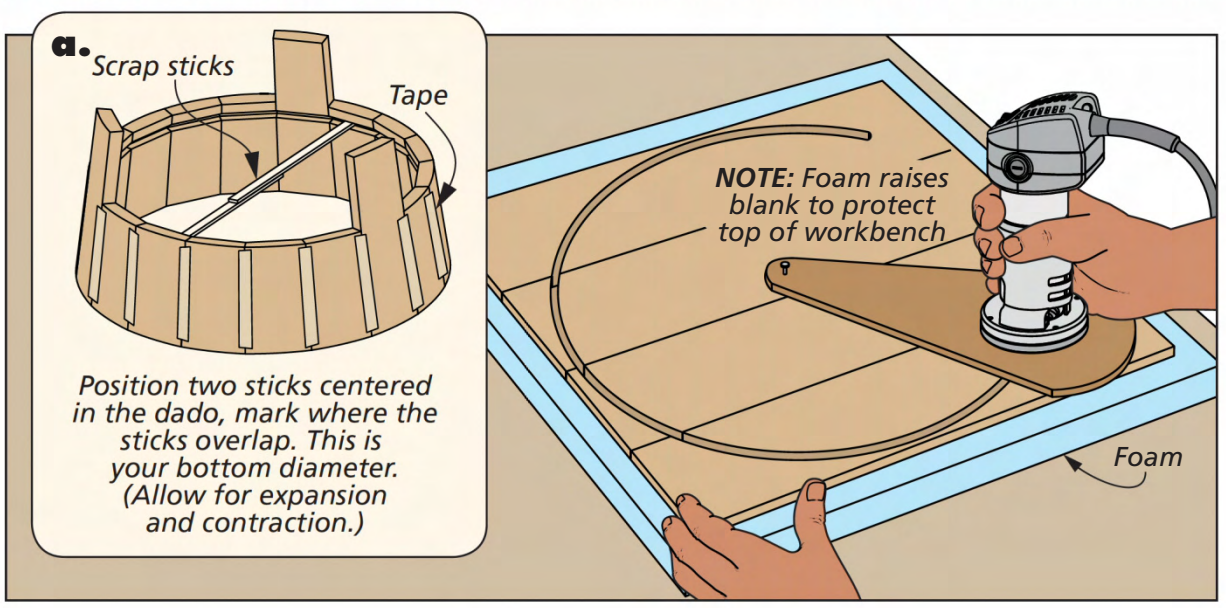

Size It Up. First, lay out all the parts edge-to-edge and tape joints together on the outside. Roll it up and tape the last joint, then measure inside the dado as shown to determine the bottom diameter (detail 'a'). Then rout the bottom to size.

MAKING A COPPER HOOP

Adding a hoop to the planter enhances the look of the project. It takes some effort to make, position, and fit the hoop, but it's worth it, in my opinion. It all starts with a copper bar that's a ½" wide, and long enough to wrap around the planter. As you see in the main drawing on the next page, the hoop is held together with rivets.

You'll need a metal-working vise, or an anvil with the traditional horn on one end. And throw in a ball-peen hammer to bring it all together. Sizing and fitting the hoop on the planter requires you to flip it upside down on the workbench.

SIZE THE HOOP. To get the initial size of the hoop I started with a cloth measuring tape, the kind a tailor uses. The goal is for the hoop to land in the center of staves on the planter, so mark the necessary offset for the top of the hoop in several locations.

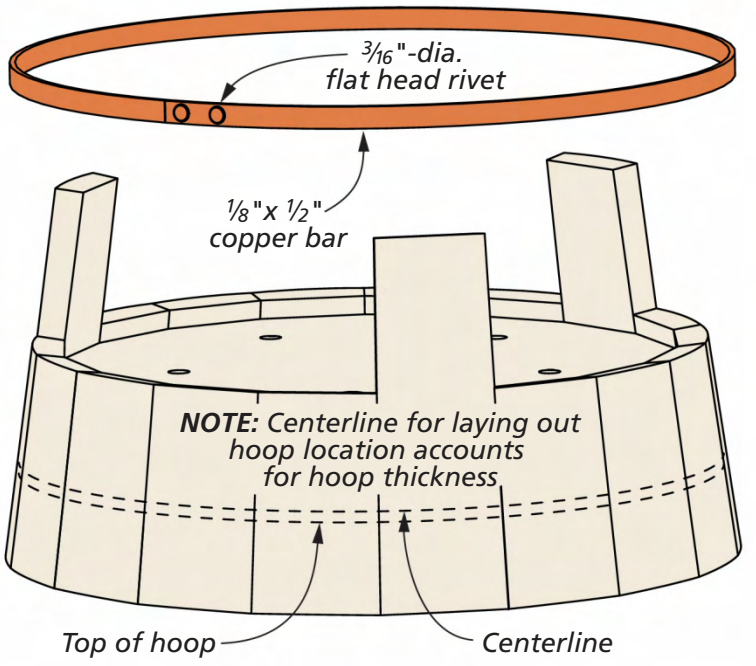

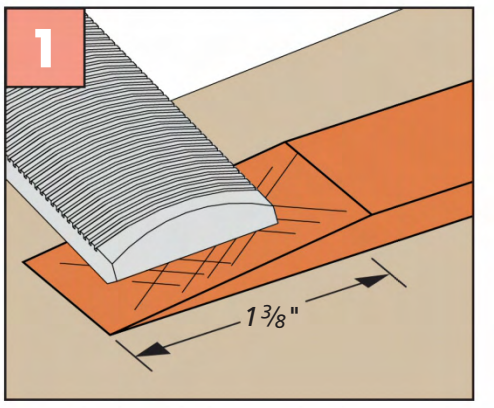

Scarf Joint. File mating tapers on the ends of the hoop. It's good to leave them rough.

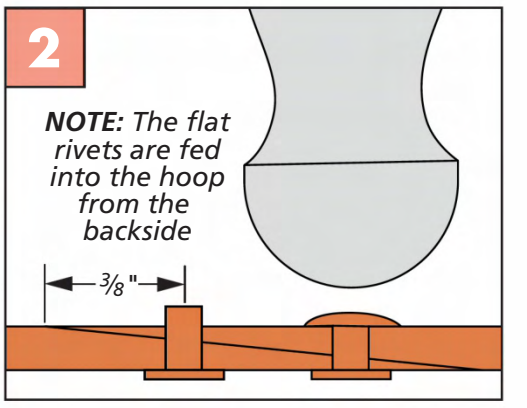

Rivets. Use your ball-peen hammer to swell the rivets, locking the hoop ends together.

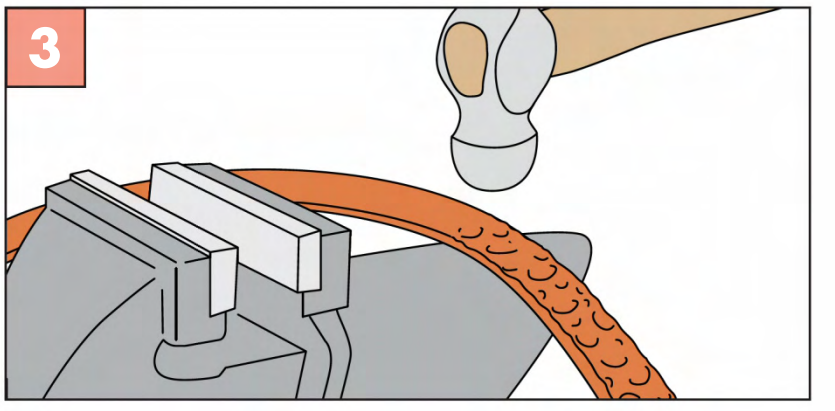

Peen the Hoop. To add character to the hoop, gently peen the outside surface and top edge of the copper with your ball-peen hammer.

When you measure with the cloth tape, add 1⅜" to the overall length for the scarf joint that will tie the hoop together.

DRY FIT THE HOOP. To prepare for the dry fit, transfer the measurement to the strip of copper and cut it to length. If you're so inclined, you can shape a piece of scrap plywood to the needed circumference of the hoop. It doesn't have to be exact, just close enough that it prevents the bar from kinking while you're forming the initial shape.

COMPLETE THE HOOP. The steps shown in Figures 1 through 3 above will guide you through successfully completing the hoop. When that task is done, it's time to attach the hoop to the planter.

TACKLING A FUSSY FIT. To start, position the planter upside-down on the bench and try to tap the ring in place evenly on the planter. Use a wood block to avoid marring the edge of the hoop.

In theory, the hoop should "bite" into the staves and legs, holding it in place. If that works, great, you live a charmed shop life. Then you can epoxy the hoop in place. The reality is that the hoop will want to pop free opposite of where you're working. So, here's another way to skin this cat. First, place the planter on a couple of two-bys that are set on a pair of saw horses. Now you can hold the hoop in place with clamps. The box below to the left shows this setup. To ensure the hoop stays put, I epoxied it to the barrel in multiple places. Let the epoxy completely set before moving on to the final steps.

All that's left to do is prepare the planter for outdoor life. *Penofin* is applied all over the planter. When it was dry, I painted the inside walls and bottom with black oil paint. When that's dry, pull out your green thumb and fill your new planter with your favorite flora. W

ATTACH THE HOOP

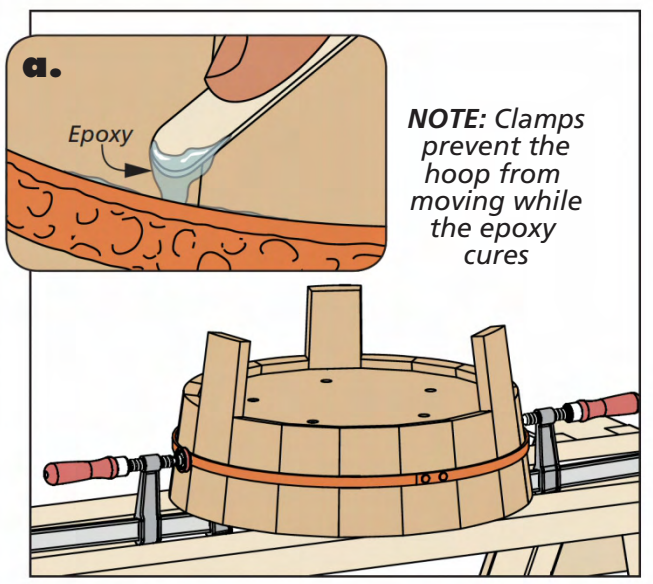

Get a Grip. Flip the planter upside-down and place on two two-bys. Clamp the hoop in place while epoxy sets.

Materials, Supplies & Cutting Diagram

A	Legs (3)	3/4 x 3 1/2 - 8 1/2	• (2) 3/16"-dia. Copper Flat Head Rivets
B	Staves (15)	3/4 x 3 1/2 - 5	• (1) 1/8" x 1/2" - 60" Copper Bar
C	Bottom (1)	3/8 x 16 - 16 rgh.	

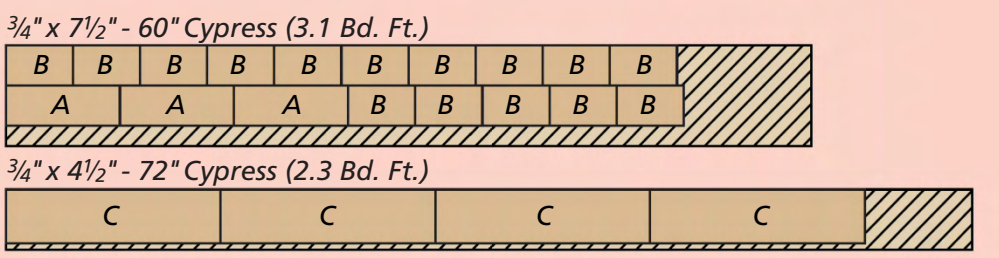

Leisure Daybed

This elegant daybed is inspired by the work of Thomas Day, a 19th century cabinetmaker from North Carolina and exudes luxury.

Let's take a trip back to the early 19th century, where Thomas Day, a furniture designer and maker, was in his prime. Born into a free African-American family in Virginia, Day had set up shop in Milton, North Carolina and was a skilled craftsman of some renown. Today, Thomas Day's furniture and architectural work is easily recognized through out the South and his work has been showcased in museums across the country.

INSPIRED. Taking inspiration from his work, we've designed and built this daybed. Made from rich walnut, it calls forth some details that Day was known for. Those details are namely, the ogee curves in the back rail and ends, along with the details on the feet. And while these details may look challenging to create, a handful of templates are all you need for success.

A few other details to note on this bed are the gently curving legs and the thick, custom cushion that covers the bed. Some simple band saw work and chiseling shape the legs up. While the cushion is large, don't let it intimidate you. By ordering the foam cut to size, the upholstery is pretty straight forward. All it takes is a little patience, a set of helping hands, a few yards of fabric, and some common tools. So, roll up your sleeves, grab a coffee, and head into the shop to get started on this daybed.

▲ The details on the feet of our bed reflect the style of feet that Day often employed in his own furniture. The bright upholstery stands in nice contrast to the dark, rich walnut.

Written by: Logan Wittmer; Project Design: Dillon Baker

Illustrations: Dirk Ver Steeg

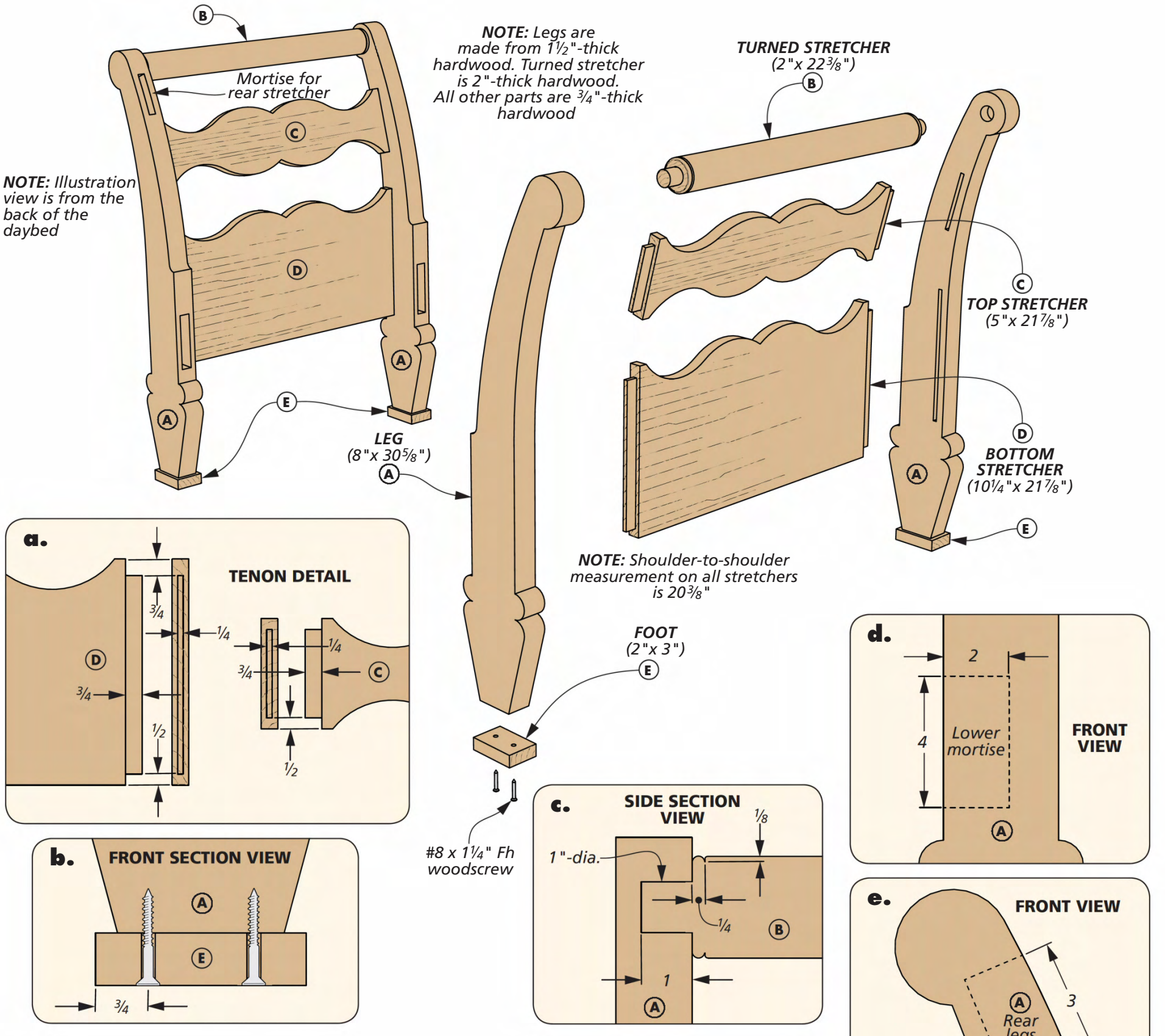

Making & Assembling the **ENDS**

The starting point for our daybed is going to be building the end assemblies that are shown above. Each end consists of two legs, a turned stretcher, an upper and lower stretcher, and a couple of feet.

CURVED LEGS. Frankly, the curved legs are the most challenging part of this entire project. So, by starting with them first, everything else is downhill. It begins by making a hardboard template using the pattern available at *woodsmith.com/254.* Print off a few extra sets of patterns and apply one to each leg. These helps keep the mortise locations all straight.

It's important to get this pattern correct, so take your time shaping it. When you're happy with your template, use it to trace out the legs on your stock. Orient the template so that the grain runs along the length of the leg the best you can. If you happen to have any stock with a curved grain pattern, this would be the perfect use for it.

PLANNED CUTS. At this point, you need to make a cut on the blank. As you can see in Figure 1 and '1a', you need to cut a taper along the inside edge of the back legs. This is so you have a flat reference surface to start a Forstner bit when you drill the mortises in the legs.

ANGLED MORTISES. The rear legs each have five mortises, and the front legs have four. Cutting the mortises on the inside edge of

LEG MORTISES

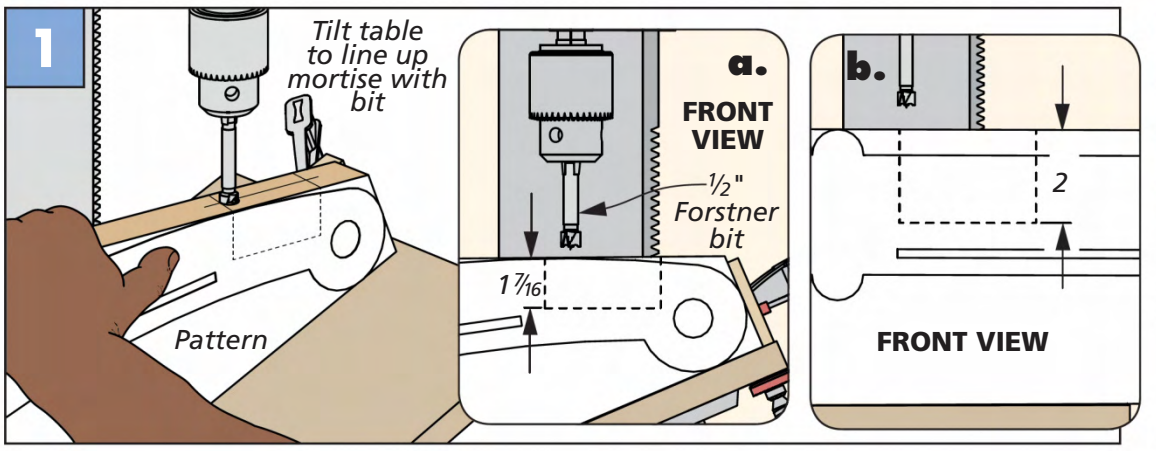

Drill & Square. After tapering the blank, tilt the drill press table 23° and drill out the mortise using a Forstner bit. Use a square to transfer the mortise location across the edge of the blank.

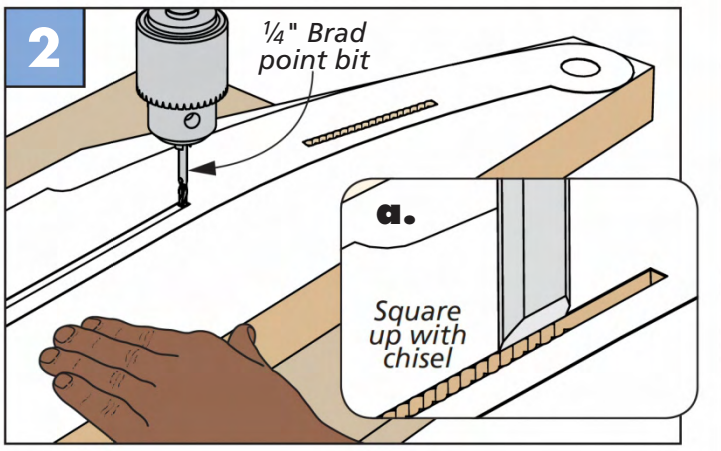

Overlapping Holes. The long mortises on the inside of the leg can be formed by drilling overlapping holes.

each leg is up first. The lower mortises are square to the edge, so cut those first. Remove most of the waste at the drill press and square up the edges with a chisel. For the upper mortise on the back legs, you'll need to tilt the drill press table to match the angle of the leg blank. You can see this in Figure 1 above.

Now, you can drill and chop the remaining mortises on the inside faces of each leg. You can see this in Figure 2. Finally, drill out the mortise for the turned stretcher at the top of each leg.

TRIM THE LEGS. With all the mortises cut, you can finish shaping the leg. After sawing away the waste, use a flush-trim bit to trim the legs to the template. Tuck in the details on the feet using a chisel and some sandpaper wrapped around a steel rule.

SERIES OF STRETCHERS. There are three stretchers that bring each end assembly together. The turned one is up first and is an easy turning. See Figure 1 below. Turn a blank round and cut tenons on each end with a bedan or parting tool. Then, cut the small bead on each end. I used a modified spindle gouge to cut mine — a video of how I made it is on *Woodsmith.com/254*.

CURVED STRETCHERS. The remaining stretchers have a decorative ogee cut on them. Start by cutting a tenon on each end of the stock. You can see this setup in Figure 2 below.

Now, like the legs, you'll make a hardboard template. Transfer the pattern shape to the stretchers and rough cut them at the band saw. Then, trim them flush to the template. After they're shaped, you can glue up each end assembly. For the bottom stretcher, only glue the center third of the tenon, allowing the stretcher to expand and contract. Finally, cut and screw the small foot on each leg.

For patterns and a video on making a beading tool, go to: Woodsmith.com/254

MAKING STRETCHERS

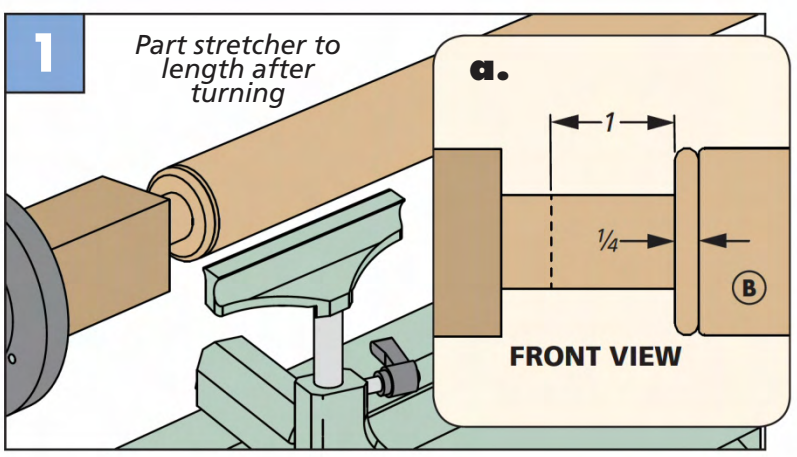

Round Stretcher. Turn a square blank into a round cylinder and cut the tenon on each end. Use a beading tool to cut a bead on the end of the stretcher.

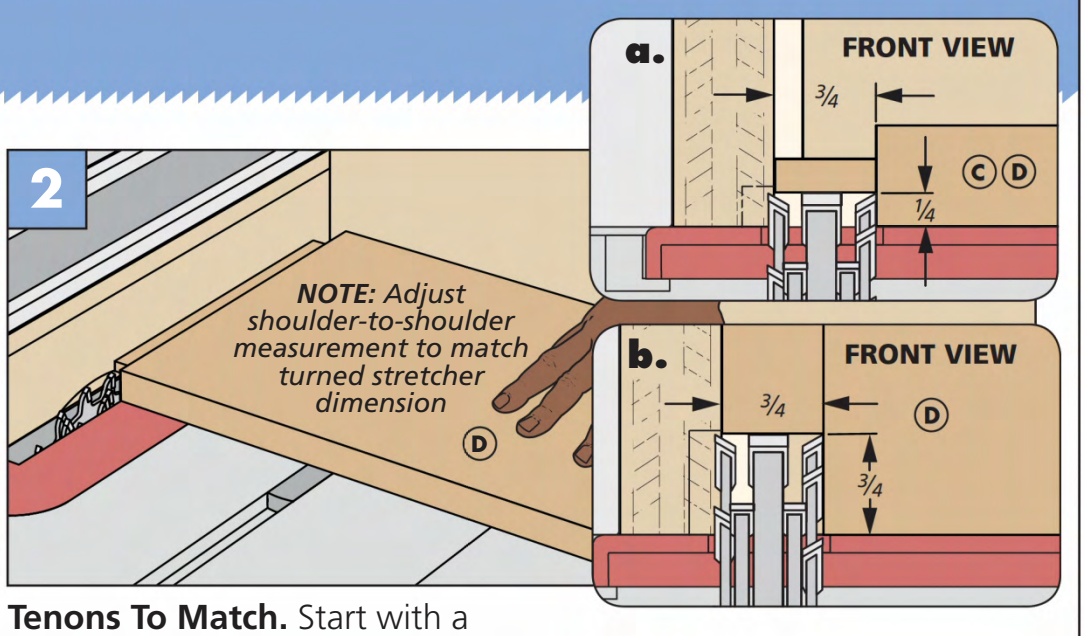

Tenons To Match. Start with a square blank and cut the tenons using a dado blade at the table saw. Flip the workpiece on edge to cut the tenon shoulder.

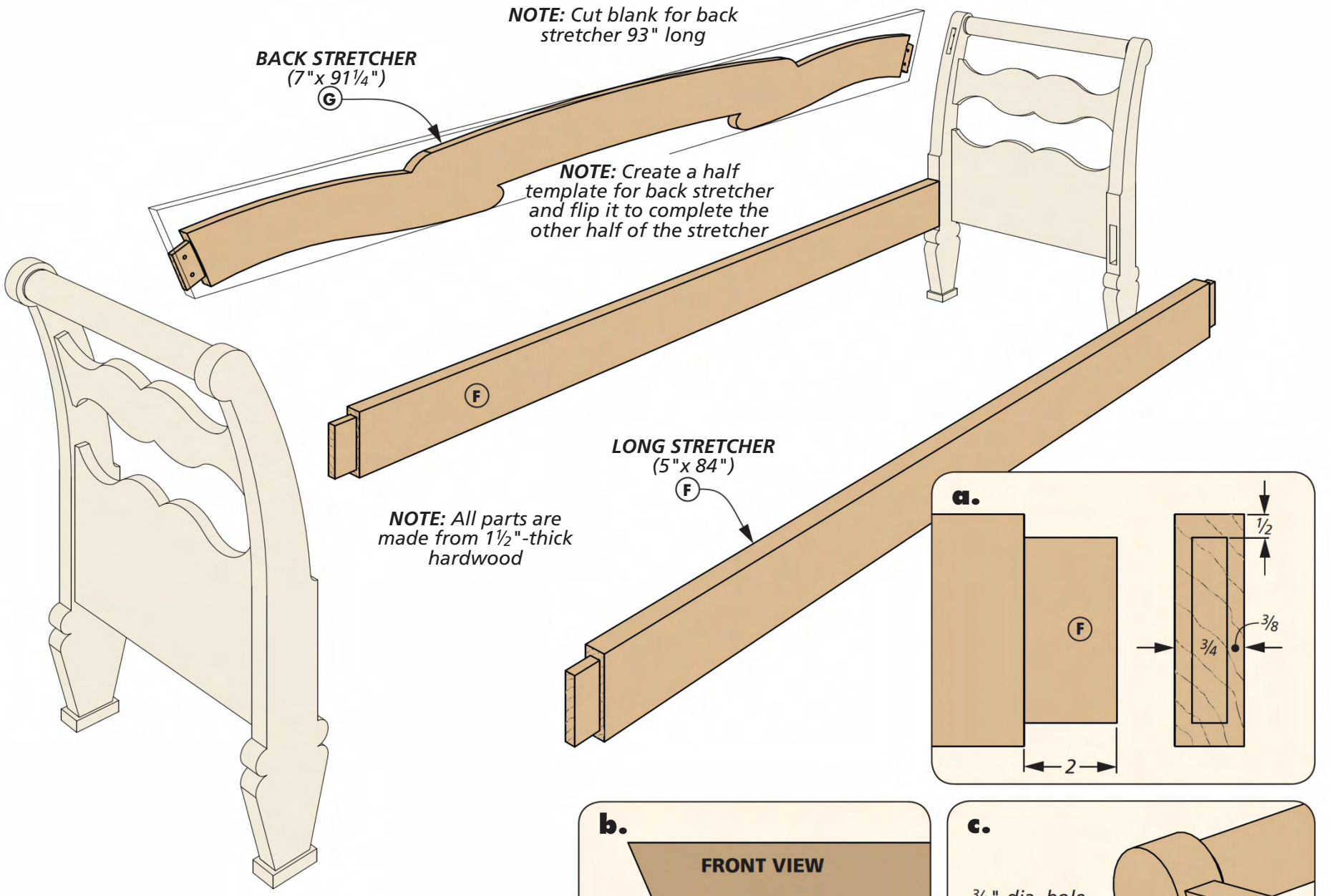

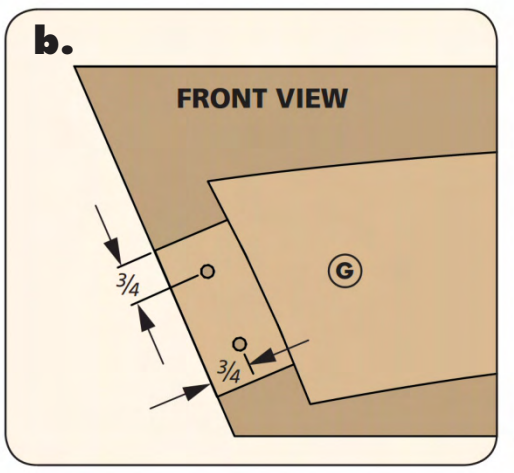

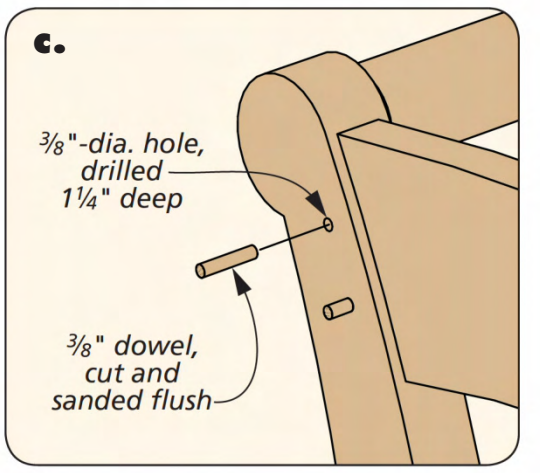

Long **STRETCHERS**

With the end assemblies glued up, let's shift our concentration to the stretchers that bring them together. A pair of lower stretchers and some slats will support the cushion that you'll make in a bit, while the upper one features eye-catching curves. Let's get the bottom ones done first.

LONG TENONS. After cutting the stock for the lower stretchers to size, it's time to make the tenons. My preferred method for cutting tenons is the table saw with a dado blade. But with the length of these stretchers, it's easier to use a router in my opinion. Although, a dado blade in a radial arm saw would be perfect if you're a radial arm fan.

To cut the tenon with a handheld router, start off by scribing the shoulder line around the workpiece. Then, attach a scrap of MDF to the workpiece with double-sided tape, aligning it to the shoulder line. Using a dado clean-out bit, work from the end of the tenon back to the guide, making the final shoulder cut with the bearing following the guide. Flip it over to cut the other face.

After the faces are cut, use a handsaw to cut the top and bottom shoulders and pare them to the baseline with a chisel. Now, you can dry-fit the long stretchers with the end assemblies. Hold them in place with a long clamp (or ratchet strap, if you don't have clamps long enough).

BACK STRETCHER. The curvature of the legs means that the tenon on the back stretcher is a little more work to create. Start by shaping the stretcher. This is as simple as creating a final template, cutting the stretcher to shape, and then trimming it flush.

To layout the tenon, clamp your workpiece in place on the back of the bed, making sure it's level. Then, transfer the curve of the legs to the workpiece.

Now, you're going to make an MDF template that matches that curve. After getting the shape close, attach sandpaper to the leg and sand the template for a perfect fit.

ROUT MORE TENONS. With the template complete, you can cut the tenon the same way as you cut

GO 2 Online Extras

For a pattern for the back stretcher, go to: Woodsmith.com/254

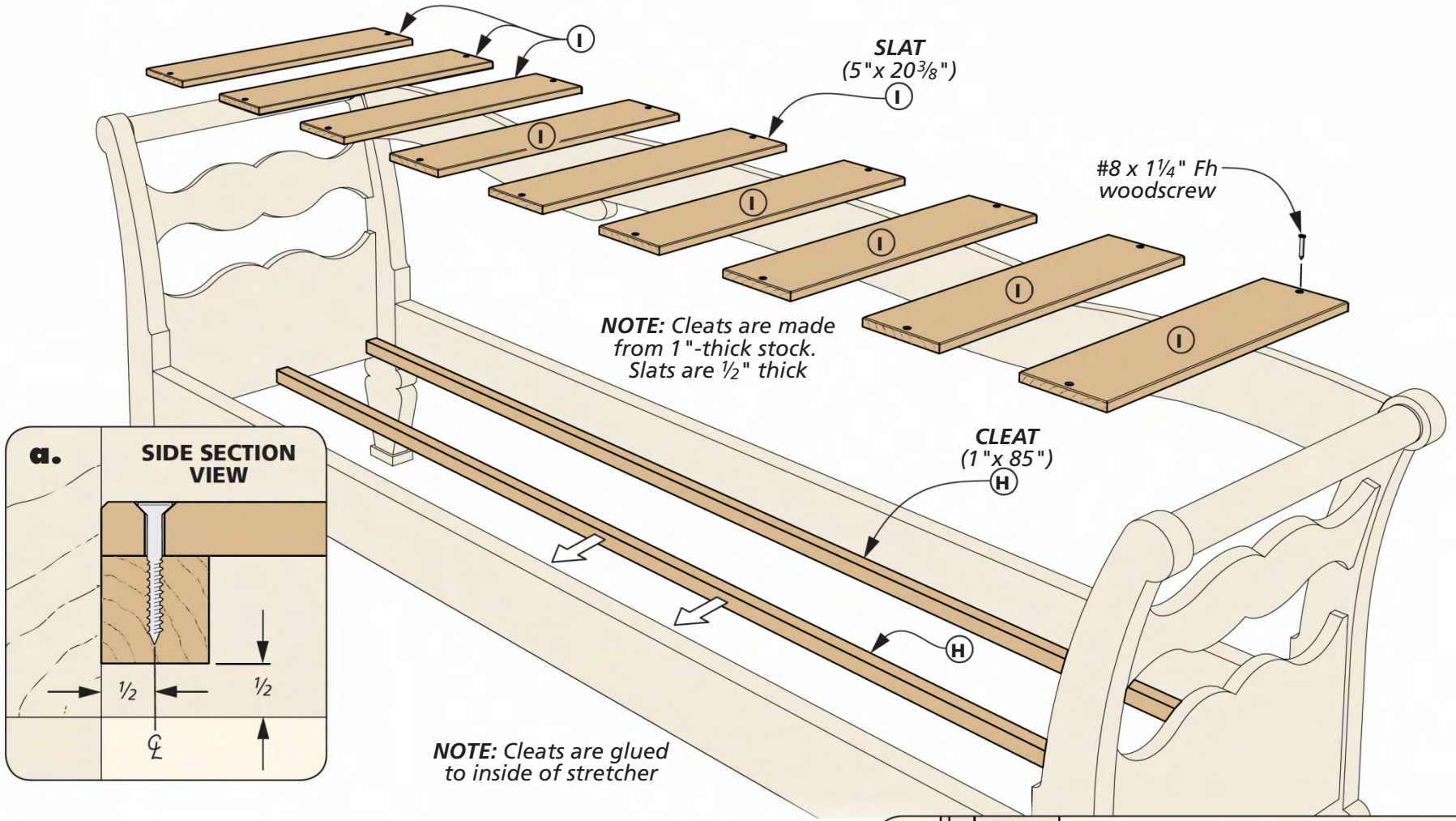

the lower ones. Attach the MDF to the rail and nibble away the waste until you can make a final pass along the template. After the cheeks are cut, use a handsaw to cut the shoulder on the tenon. You can see these steps in Figures 1 and 2 below.

Now, you can glue the long stretchers to the base. An extra set of hands helps get everything in place. Drill a pair of holes in the back of the rear legs for pegs to lock the top rail in place (detail 'c' on the previous page).

CUSHION SUPPORT

The cushion, that you'll make in a bit, sits on a pair of rails and a series of slats. The cleats are simply cut to size and glued to the inside of the long stretchers. Side note here — I used yellow pine for these since they're hidden, but you can use whatever stock you have available.

WIDE SLATS. The last thing to add to the bed is the slats. These are cut to size and installed with screws onto the cleats. It's important to make sure to only screw through the center of each slat. Doing this will allow the slats to expand and contract with seasonal changes in humidity. Now, it's time for a little upholstery.

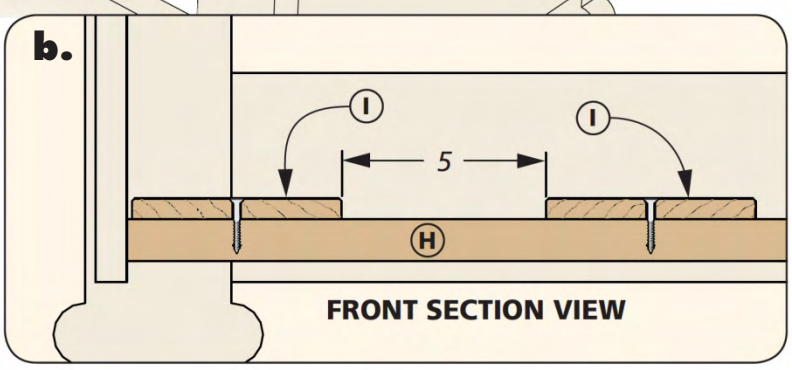

ROUTING BACK STRETCHER TENON

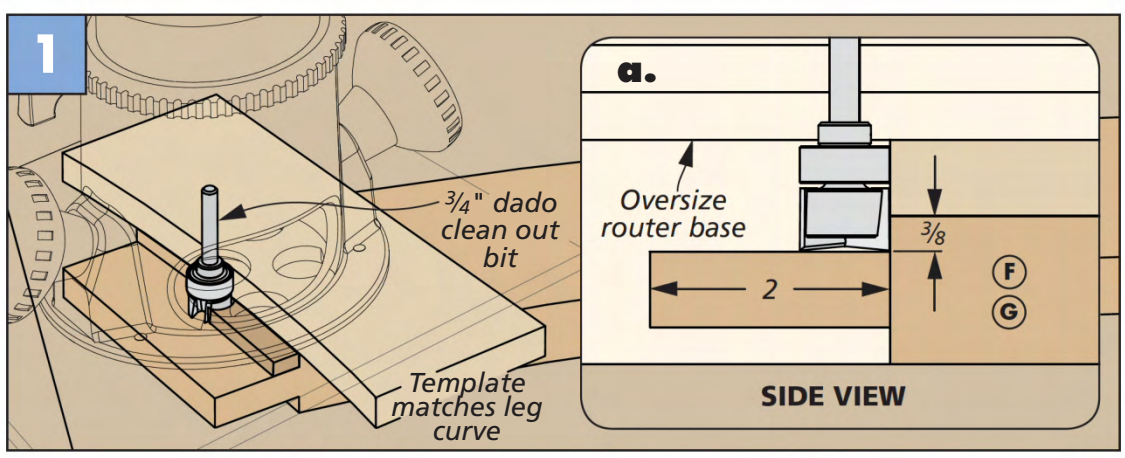

Rout Tenon Cheeks. Use a dado clean-out bit to hog away the waste on the cheeks of the tenon. Use an oversized router baseplate to help lend additional support as you rout towards the ends of the tenons.

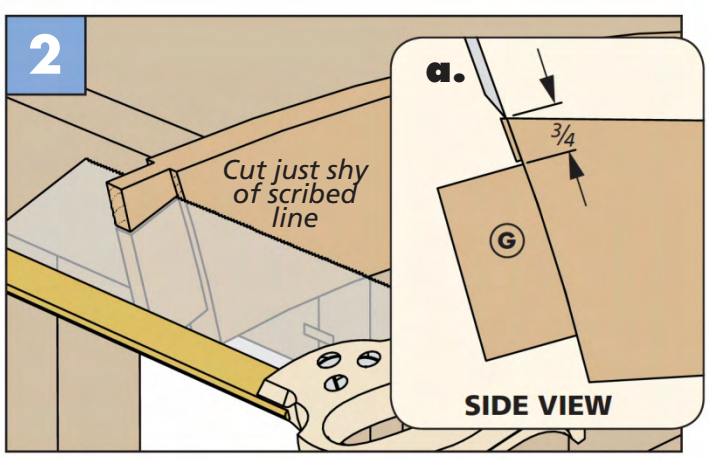

Cut Shoulder. After cutting the cheeks, cut the shoulder on the top and bottom with a handsaw, and chisel back to the line.

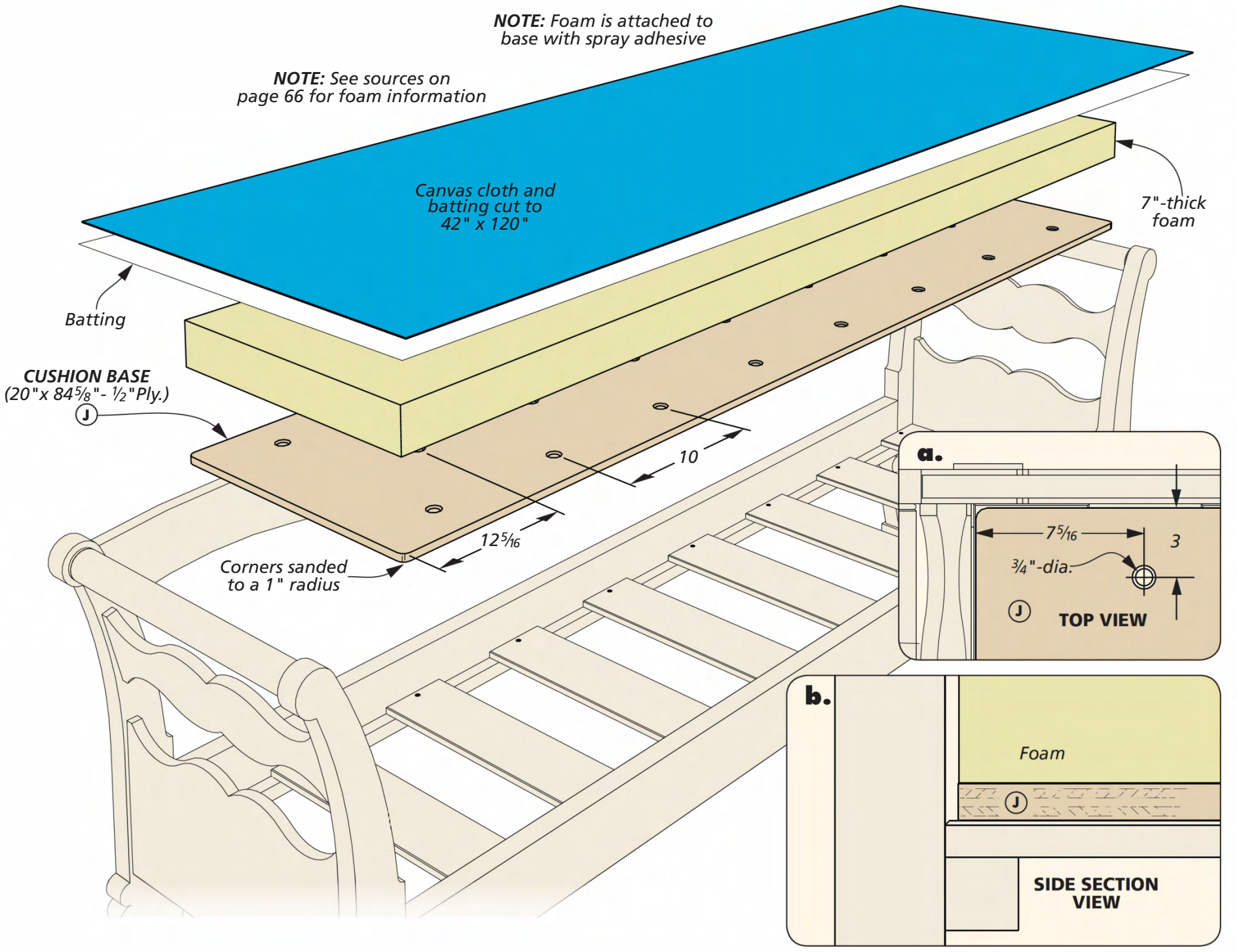

Soft **CUSHION**

At this point, the only thing left to do is to apply finish to the bed and make the cushion (of course, you could have someone upholster the cushion for you if you'd like). To finish our daybed, I first applied a coat of "Black Walnut" Danish oil. After that had a few days to cure, I sprayed it with a couple of coats of spray lacquer. While the lacquer was curing, I went to work on the cushion.

COMFY CUSHION. The cushion consists of four parts — a plywood base, the foam, batting, and finally the fabric. The plywood base is cut to size and there's a series of holes drilled through it to allow air to escape when you sit down and compress the foam. Also, spend a few minutes to round over the corners of the plywood a little — this makes a little more room for the fabric and keeps the plywood from denting the bed as it's dropped in place.

The foam is the next layer. I ordered this cut to size (see sources on page 66). It's attached to the plywood with spray adhesive. Use a helper to get the positioning before you place it.

FABRIC. Now comes the batting and fabric. To be honest, upholstery is something that takes practice. But, if you take your time you can get good results.

Starting with the batting, wrap it around and staple it in place. The batting only needs a few staples to hold it.

Then, starting in the middle, attach the fabric working toward the corners. Carefully fold the corners so they're neat and tucked in before stapling it down. A pneumatic stapler works wonders here, if you have one, otherwise a spring loaded stapler will work as well. Work all of the way around, keeping the fabric tight. The photos on the next page give you some insight on this process.

After the upholstery is done, you can drop the cushion in place on the couch and give it it's first test nap. Then, it's time to grab a helper and get it moved into your home. W

UPHOLSTERY STEP-BY STEP

Attach Batting First. Starting on the edge, wrap the batting around the foam cushion and staple it to the plywood base. Follow this by wrapping the fabric and stapling it in place.

Center of Corner. For a refined look, pull the corner of the fabric around the plywood, making sure it's tight toward the center before attaching it.

Tuck the Corner. Fold one edge of the corner material tightly around the side, making sure it stays flat. Smooth out any wrinkles as you attach it in place.

Neat Corner. Finish the corner by folding the remaining edge in, making sure the fabric is laying smooth. Then, shoot some staples and trim the excess.

Materials, Supplies & Cutting Diagram

A	Legs (4)	1½ x 8 - 30⅝
B	Turned Stretchers (2)	2 x 2 - 22⅜
C	Top Stretchers (2)	¾ x 5 - 21⅞
D	Bottom Stretchers (2)	¾ x 10¼ - 21⅞
E	Feet (4)	¾ x 2 - 3
F	Long Stretchers (2)	1½ x 5 - 84
G	Back Stretcher (1)	1 x 7 - 93 rgh.
H	Cleats (2)	1 x 1 - 85
I	Slats (9)	½ x 5 - 20⅜
J	Cushion Base (1)	½ ply. - 20 x 84⅝

- (1) 20" x 80" Foam (7" thick)
- (1) 42" x 120" Batting
- (1) 42" x 120" Canvas Cloth
- (26) #8 x 1¼" Fh Woodscrews

¾" x 6" - 72" Walnut (Two Boards @ 3.0 Bd. Ft. Each)

ALSO NEEDED: *One 48" x 96" sheet of ½" Baltic birch plywood*

1½" x 4½" - 96" Walnut (Two Boards @ 6.0 Bd. Ft. Each)

1½" x 5" - 96" Walnut (Two Boards @ 6.7 Bd. Ft. Each)

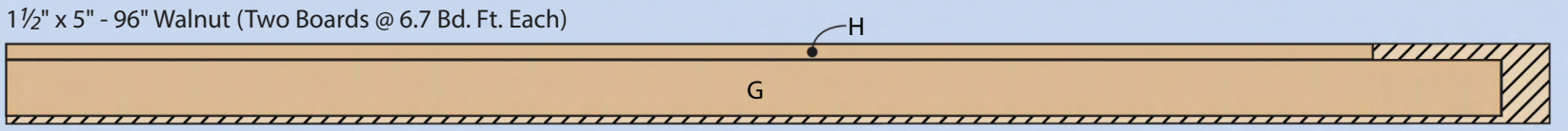

1½" x 5½" - 96" Walnut (Two Boards @ 7.3 Bd. Ft. Each)

2" x 6½" - 72" Walnut (8.1 Bd. Ft.)

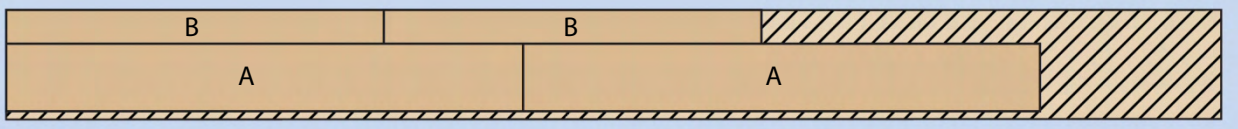

½" x 5½" - 72" Pine (Three Boards @ 2.8 Sq. Ft. Each)

Slant Front Bookcase

Three things separate this piece from a regular bookcase — tiered shelves, a drawer for storage, and a stand that lifts it all off the floor.

On occasion, sequels work out just fine. Like the *Godfather Part II,* right? This bookcase, a follow-up of the desk and shelf from last issue (*Woodsmith* 253) might not be as powerful of a second act as that, but it's above average in several categories.

As the photos here reveal, this is more than a bookcase. It starts out at the top with generously sized shelves. But as you continue down the bookcase the tiered openings get deeper, expanding your storage options. Lastly, there's the large drawer in the bottom of the case. It's attached with full-extension drawer slides that make it easy to open and close the drawer. And the full-extension feature provides access to the whole drawer.

Like the desk, the bookcase is made of hard maple for long life and good looks. The clear finish lets the wood grain shine through.

THE STAND. The stand lifts the case for easy access to the drawer, which is a noble functioning piece indeed. But the form part of the equation is just as admirable. Take a look at those thick, tapered legs that are brought together by long, sassy rails that are winking a mid-century look of their own. Topping the legs and rails, a recessed and mitered riser frame embraces form and function as well. Pragmatically they're a solid surface for screwing the two components together. But they also provide a shadow line that softens the transition between the base and case. Let's get going with this project.

The large drawer in the bottom of the bookcase has an ally that makes using the drawer a breeze — full extension drawer slides. The slides give you easy access to what's stored away, even if it's heavy items.

Written and Illustrated by: Erich Lage

Project Design: Chris Fitch

Start with the SIDES

The mirrored sides you see in the main drawing to the right have quite a bit going on. Each side has six stopped dadoes to hold the top, shelves, and bottom panels. The bottom and next shelf up (the drawer shelf) form the cavity for the drawer you'll add later. There's a groove that runs along the rear edge of the sides for the plywood back. Let's start by gluing up, then sizing the boards for each side.

TAPERED EDGES. As detail 'a' shows, there's a long taper on the front edge of the sides. It starts just above the drawer shelf and goes to the top of the case. To make the sides match perfectly, tape them together before laying out and cutting the taper.

You've got options when it comes to cutting the taper. In this situation I turned to my band saw. If you don't have a band saw, or it's too unwieldy for you, use a circular saw at the bench along with a straight edge to guide it.

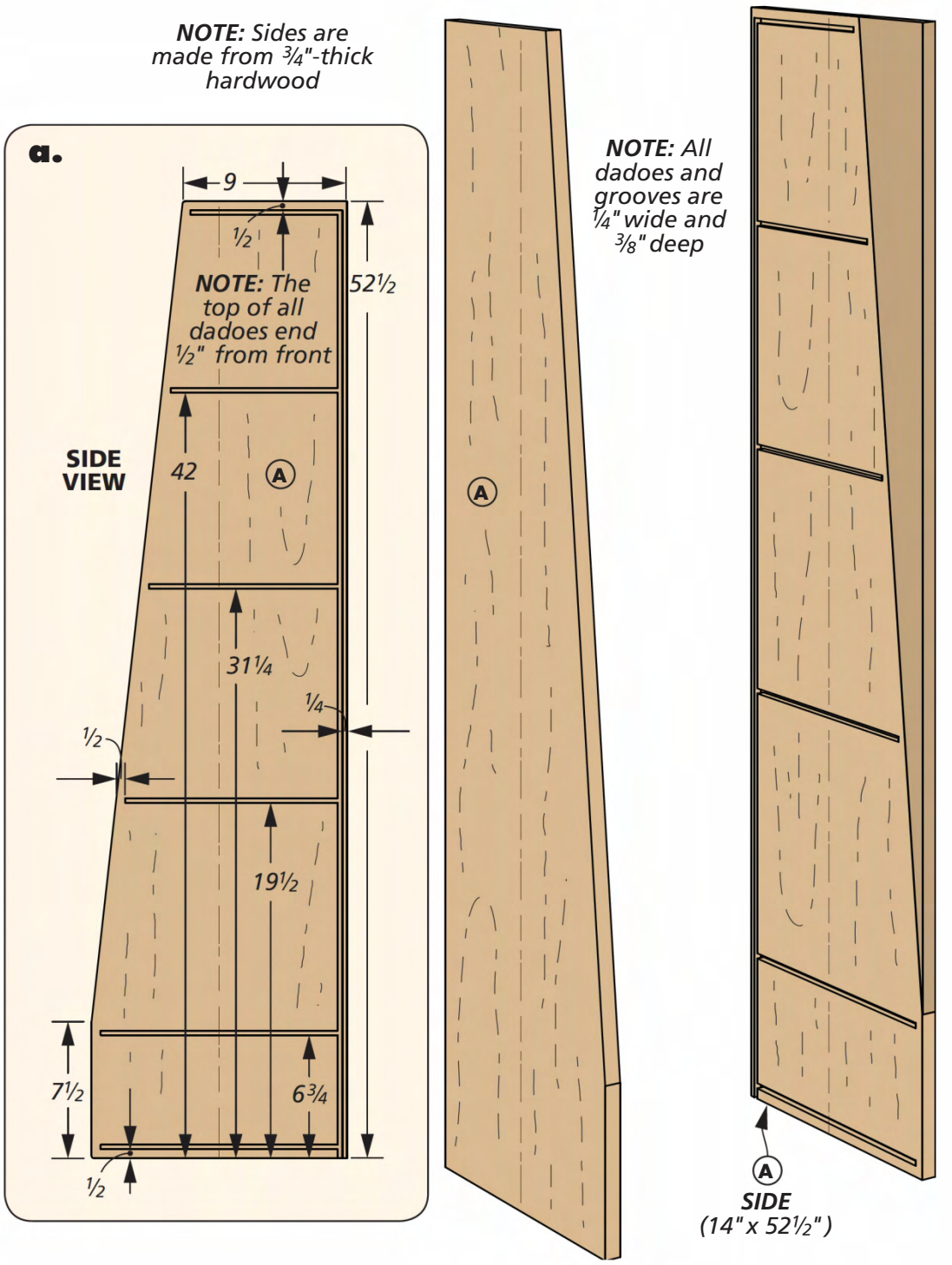

FINISHED TAPER. A hand plane smooths the rough cut of the taper. Be mindful of the grain direction while doing this step. Once the sides are apart, ease the outer edges with sandpaper. Now you can lay out the dadoes you see in detail 'a' above.

STOPPED DADOES FIRST. Over at the bench, I laid the sides back to back and lined up the marks for the dadoes. A plunge router is ideal for this task. All you have to do is start the cut shy of the end, then backrout and sneak up on the end of the dado.

The jig length is sized for the long dadoes needed for the bottom and drawer shelf. It's held in place with clamps. The box to the left shows all this. The front edges of the dadoes are squared with a chisel.

The back end of the dadoes can be left alone, as they will disappear in the groove for the plywood back. I routed that groove at the router table, stopping the groove in the dado for

ROUTING DADOES

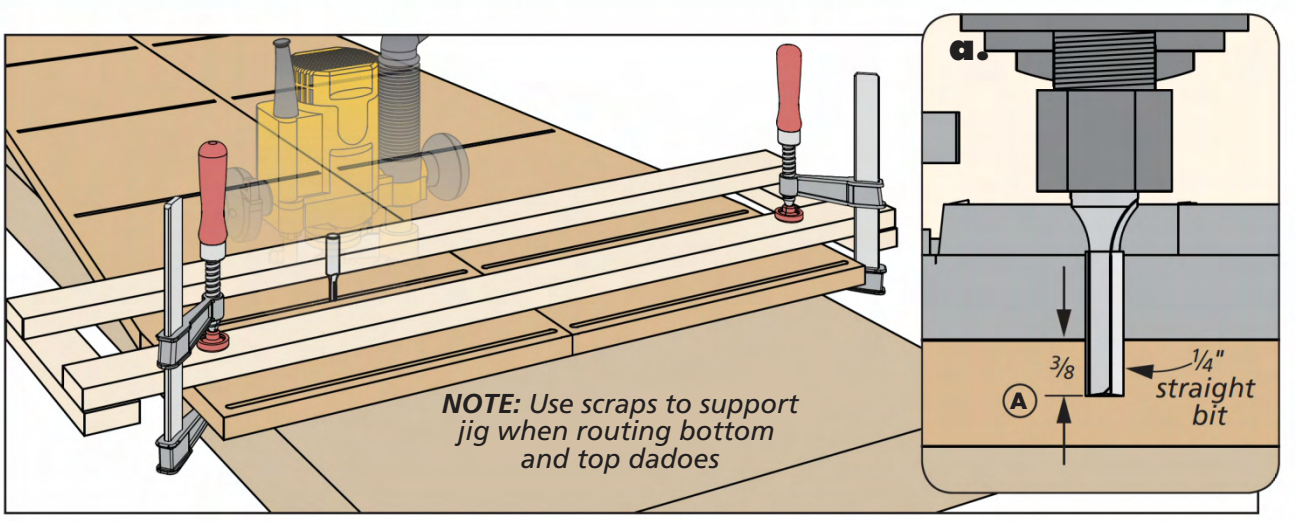

Stopped Dadoes. A simple jig that traps the base of a plunge router is all it takes to make the stopped dadoes in the sides. Square the front edges with a chisel.

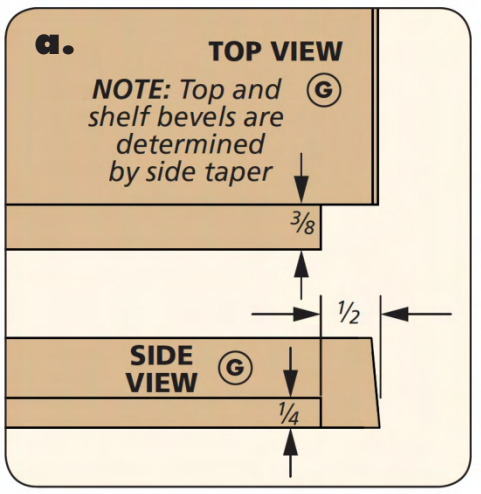

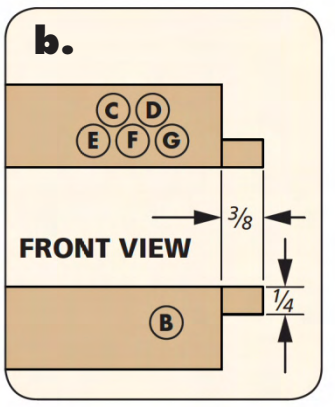

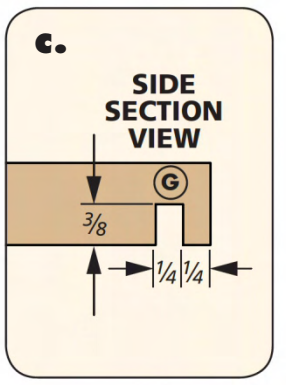

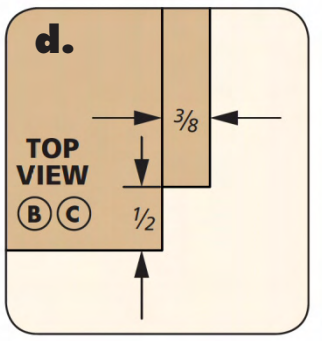

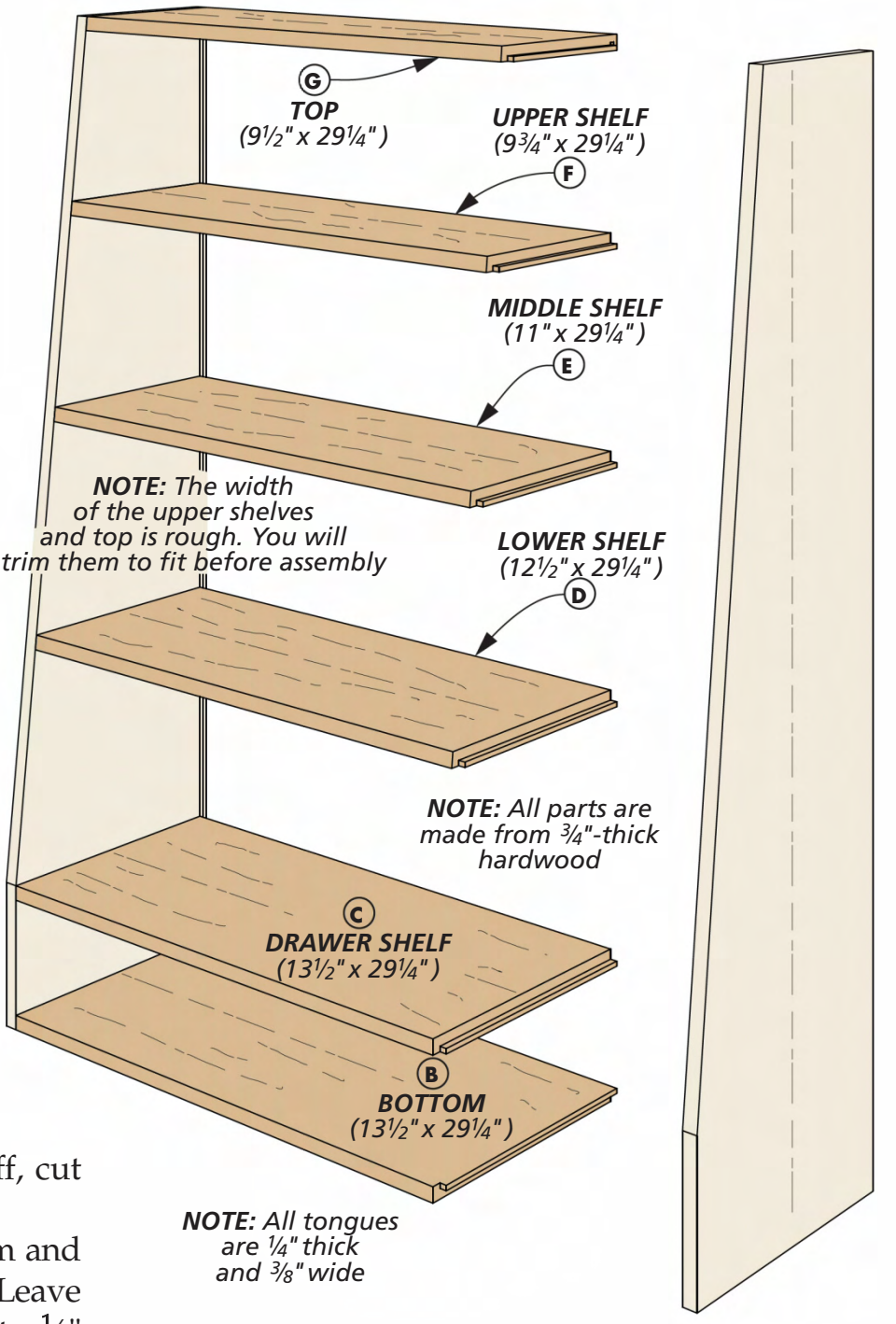

the case top. After the intersection of the groove and top dado is squared, you can move on to the horizontal panels.

HORIZONTAL PANELS

There are six pieces you need to make to bring the sides together. The lowest two (the bottom and drawer shelf) are the same size. The remaining panels get narrower as they go up in the case.

There are a couple of other things going on here as well. First, notice that the front edges of the upper four boards are beveled to match the taper of the sides (detail 'a'). Second, all the tongues are offset. The top and bottom are offset to the inside of the case, providing more surface support for the tongues (detail 'b'). The tongues on the rest of the shelves are offset like the top providing plenty of support.

After the clamps come off, cut all the panels to length.

BOTTOM UP. Rip the bottom and drawer shelf to width. Leave the shelves and top at least a ½" wide for now, you'll custom-make their widths later. It's time to cut the tongues in the boards.

TONGUES. The setup at the table saw is the same for the tongues on all the boards. An auxiliary fence with a dado blade buried in it is all that's required.

Once the tongues are cut, trim them to width on the bottom and drawer shelf, as shown in detail 'd' above. Now you can turn your attention back to the top and shelves. Start by cutting a groove for the plywood back in the top board (detail 'c'). To find the tongue length for each shelf, measure from the groove in the side to front of the dado (detail 'a,' previous page).

A CUSTOM FIT. The box to the left shows how to arrive at the width of each shelf. A kiss with your block plane cleans up the edges. Repeat this process on the remaining shelves, and then you're ready to glue up the case.

ASSEMBLY. It takes an arsenal of clamps and clamping squares to assemble the case, so some prep work is in order. Slow-set glue, rags, and some warm water are on the menu as well.

I glued all the boards to one side, then topped it off with the other side. The plywood back comes into play later after installing the drawer slides. It makes life easier, and I want easy on my plate whenever possible.

SIZING THE SHELVES & TOP

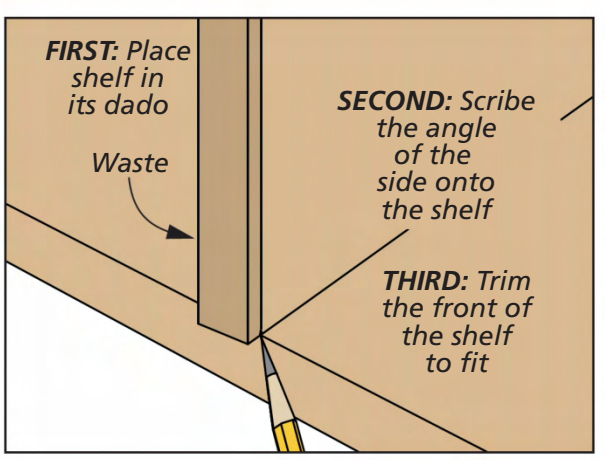

Perfect Fit. When trimming the shelf at the table saw leave it a hair wide. Then clean up the edge with a block plane.

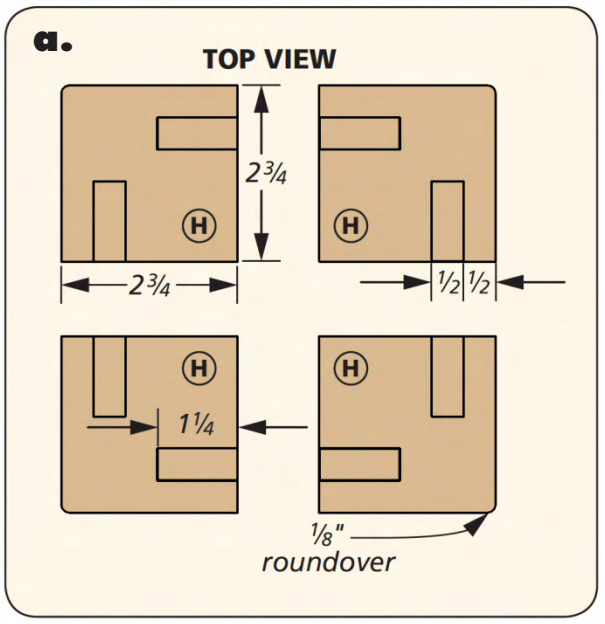

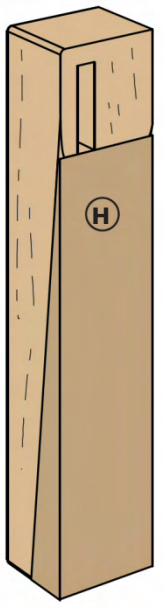

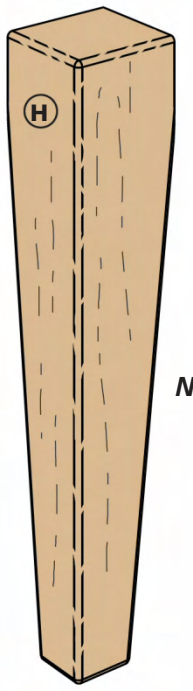

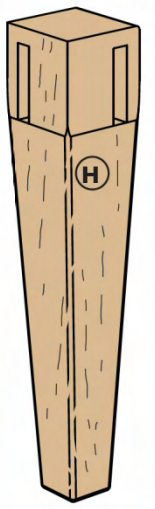

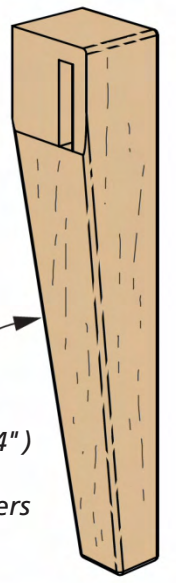

NOTE: *Legs are 2¾"-thick square hardwood blanks purchased from Osborne Wood Products see Sources on page 66*

NOTE: *Add ⅛" roundovers after base has been assembled*

LEG (2¾" x 14")

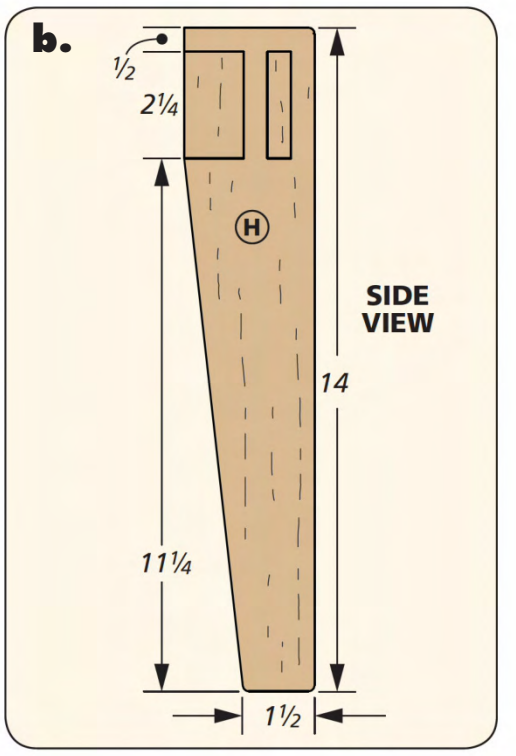

Build a strong STAND

That nice case you just finished is worthy of a stand that will lift it off the floor and make it shine at the same time. What you see on these two pages fits that bill. I started with the legs. The four solid legs that you see above are mortised to join with thick rails.

If you like, you can glue up the legs from maple blanks. I chose to purchase the ones you see here from *Osborne Wood Products*; the information is available in Sources on page 66, if you want to go that route. The legs come a little larger than what's called for here. So, I started by ripping them to their final size and cutting them to length. Then it's just a matter of selecting the best faces and orienting them for show. To keep track of the legs' positions, I loosely drew the mortise locations on the top of the legs. The results look similar to what you see in detail 'a' above. Now you can confidently drill out the mortises.

MORTISES FIRST. I don't have a mortising machine, so it's off to the drill press with the legs in tow. A Forstner bit chucked in the drill is your best bet when making mortises. These bits have been my go to bits for a long time. Overlapping the holes will leave you with minimal chisel-work to square up the opening. Now you can taper the legs over at the table saw.

TIME FOR TAPERS. To cut down on the visual bulk of the base, I tapered the inside face to add a slimming effect. A simple jig, your table saw, and the rip fence lets you accomplish this in a couple of passes. The box to the left shows the steps required to pull this off.

THE JIG. The jig acts like a sled, holding the leg in place at a fixed angle. A plan for the jig is available online at *Woodsmith.com/254*. When the tapers are finished, sand smooth any saw marks. Wait to round over the edges until the stand is assembled. Now you can turn your attention to the parts that bring the legs together.

GO 2 Online Extras

For information on making the taper jig, go to:

Woodsmith.com/254

TAPERING THE LEG

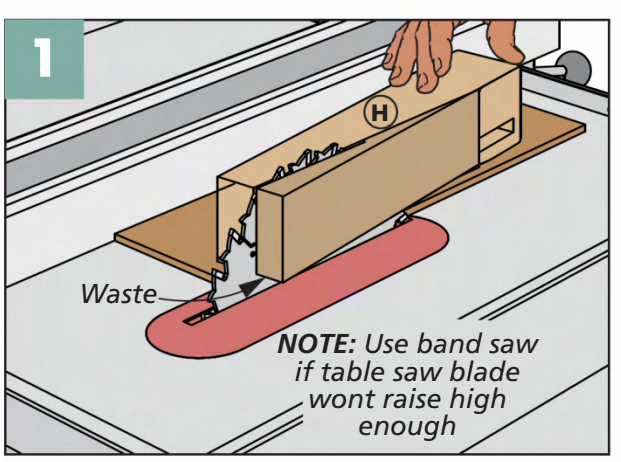

First Pass. The leg starts to come to life as you make the first cut at the table saw. Double-sided tape holds the leg in place.

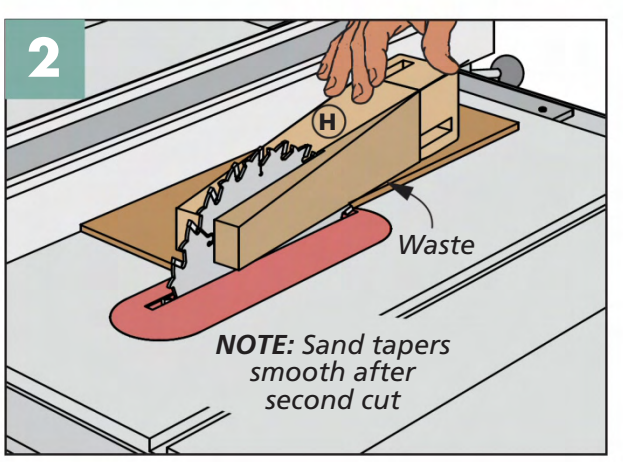

Turn & Repeat. Taper the second face by rotating the blank so the just-cut face is up. Then, make the second cut.

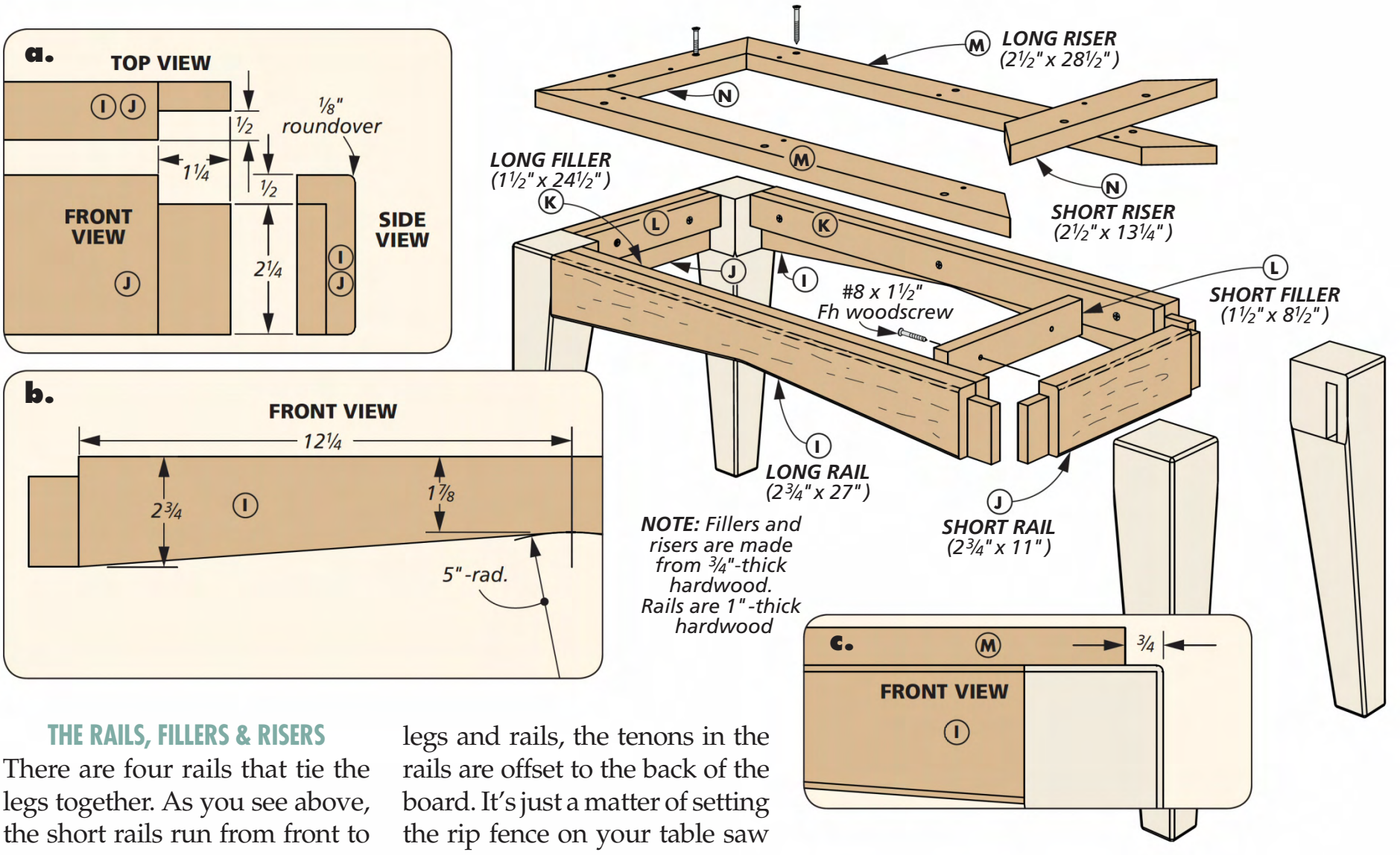

THE RAILS, FILLERS & RISERS

There are four rails that tie the legs together. As you see above, the short rails run from front to back. The long rails travel from side to side and are tapered from both ends to a center point. We'll address that detail after sizing the boards and making the offset tenons.

OFFSET TENONS. As detail 'a' above shows, the rails are flush to the front of the legs. To do this and make a strong joint between the legs and rails, the tenons in the rails are offset to the back of the board. It's just a matter of setting the rip fence on your table saw to make the shoulder cut. Then nibble away the cheek. Stand the rail on its edge to notch the top of the tenon. Repeat the process on all the rails and set the short ones aside, then they're ready for assembly.

LONG RAILS. After laying out the decorative radius on the long rails, rough out the shape at the band saw. A simple hardboard template lets you make the final shape with a flush-trim bit installed in your router table. The box below shows how easy this is to do.

With that done, I glued the legs to the long rails first, making sure to check for square as I tightened the clamps. Then it was time to bring the side rails in and glue the base together.

FILLERS & RISERS. As you see in the drawing above there are fillers screwed to the back side of the rails. The fillers' duty is to support the riser frame.

Four mitered pieces make up the riser frame. First, drill the countersinks and pilot holes. Follow up with mitering the ends of the boards. Now you can glue together the four parts of the frame. The riser frame is screwed flush to the back and centered on the stand.

I waited to attach the stand to the case until the drawer is installed. To install the drawer, you have to make it first. That's next on the agenda.

SHAPING THE FRONT RAIL

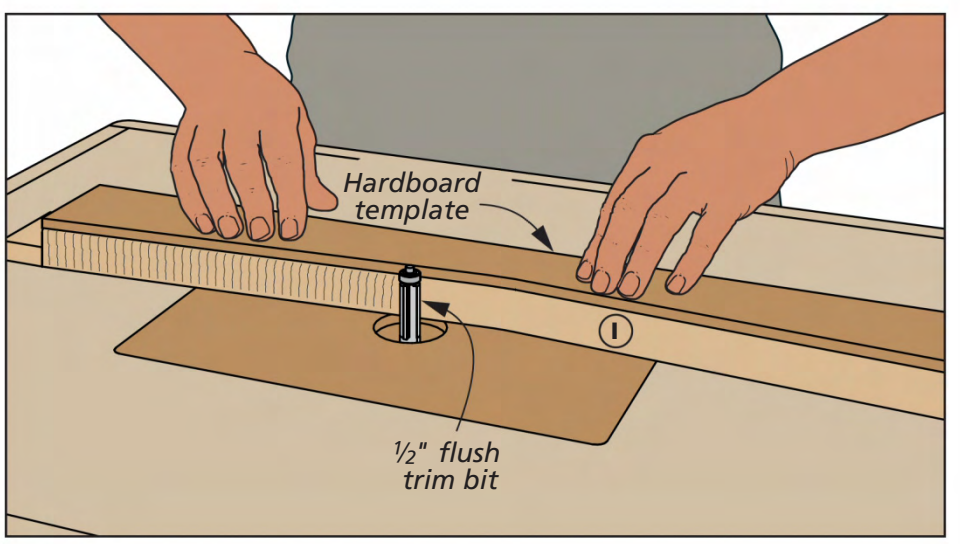

At the Router Table. A simple hardboard template lets you shape the long rails at the router table. Double-sided tape and a flush-trim bit work in tandem to make the rails look good.

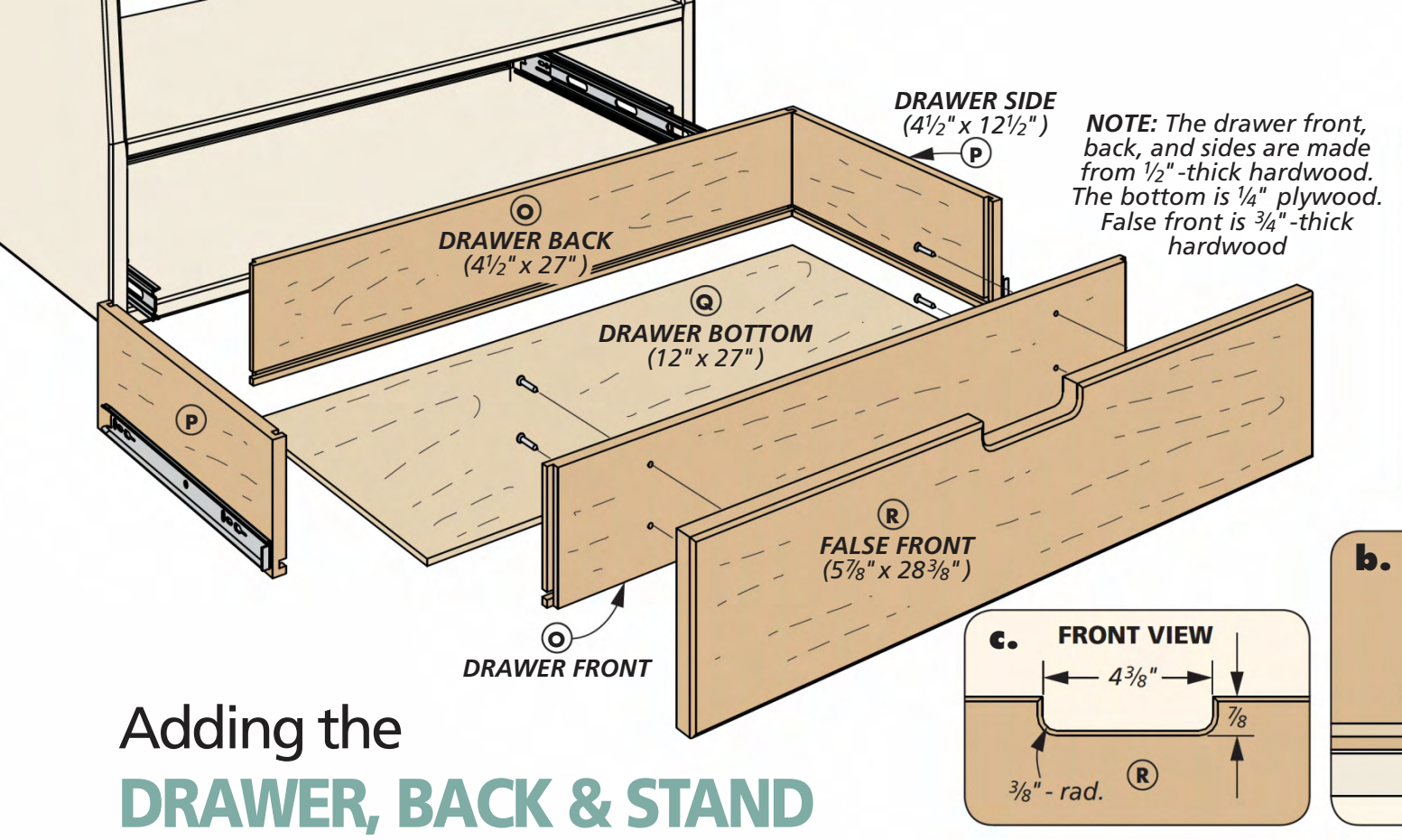

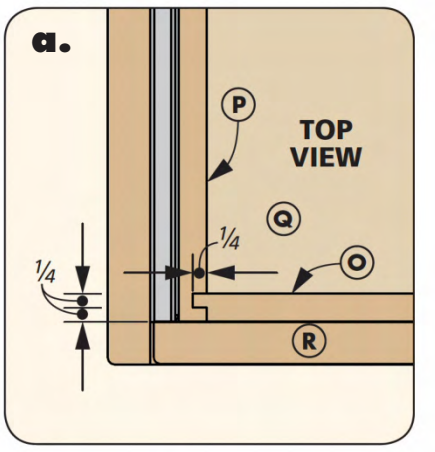

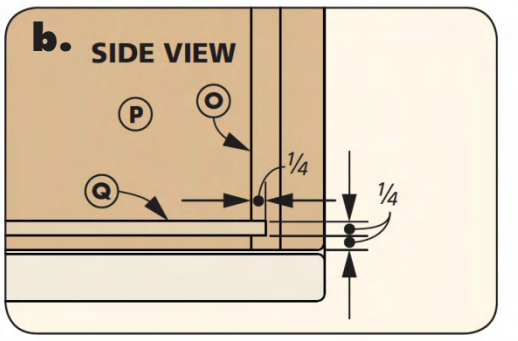

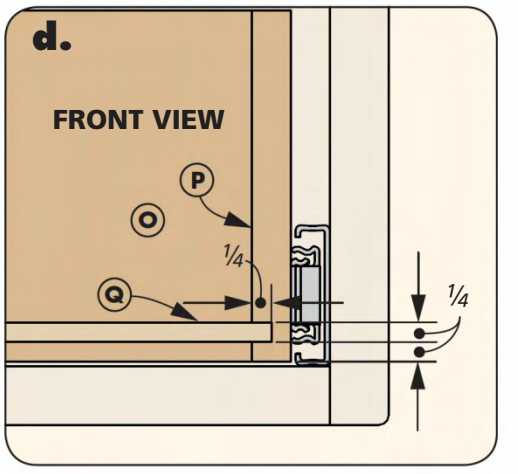

Adding the DRAWER, BACK & STAND

This bookcase is close to taking its rightful place in your home, den, or office. There are just a few things left to do — starting with the drawer.

As the drawing above reveals, this is a generously sized drawer. There's lots of room to stow away the things you want close at hand, but out of sight. If those items were sheets, pillows, and blankets you could probably get by with a drawer that slides unaided in and out of the drawer opening. But since this bookcase might take up residence in a home office, with a possible side hustle of being a classroom, I wanted to make sure the drawer was up to the task. This calls for full-extension drawer slides. This hardware helps me decide what type of joinery to use on the drawer.

SOLID, SENSIBLE JOINERY. Tongue and dado joinery is just the ticket for this drawer. Drawers are exposed to a lot of stress in the routine of being opened and closed all the time. The brunt of this stress lands squarely on the joinery that holds the drawer parts together.

The box below walks you through the steps of making the joinery. The combination of tongue and dado joinery, and mechanical slides, will be plenty strong enough for this large drawer. As you see in detail 'a' above, the dado in the sides firmly holds the tongue in place. You want the dado in the side

DRAWER JOINERY

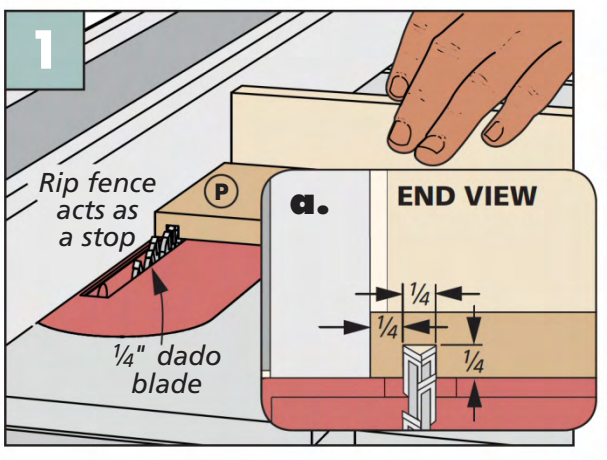

Dado Drawer Sides. Use an auxiliary fence on your miter gauge to prevent the dado chipping the drawer sides.

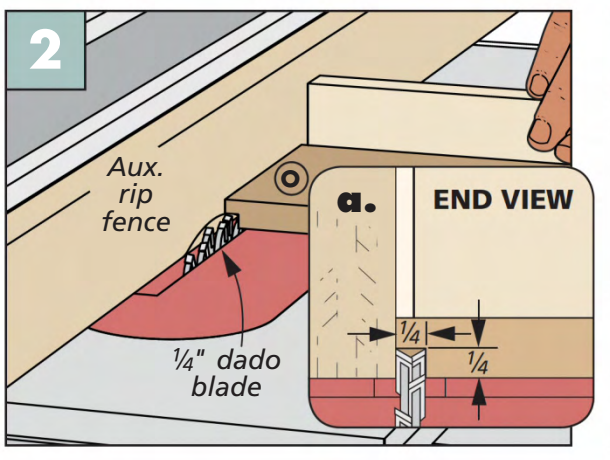

Rabbet Front & Back. Adjust the fence to make the rabbet that mates with the dado in the side.

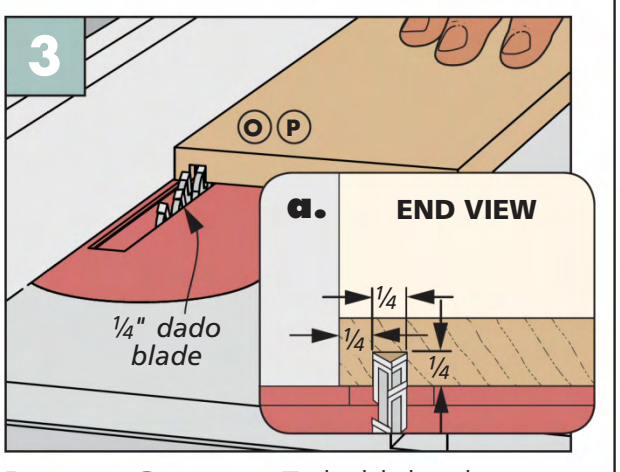

Bottom Grooves. To hold the drawer bottom, use the dado blade to cut the groove in the sides, front, and back.

so it can resist the pull and push of the drawer's operation. The one shortcoming of this joinery is that the end grain of the sides is exposed. Not to worry though, adding a false front to the drawer takes care of that problem.

ASSEMBLE THE DRAWER. All that's left to do before assembling the drawer is to cut the ¼" plywood bottom to size. Then you can bring in the glue and clamps and put the drawer together.

The next step is to install the cabinet side of the drawer slides following the manufacturer's instructions. Then position, attach, and adjust the drawer side of the slide.

FALSE FRONT. Detail 'c' on the previous page provides the information needed for making the finger notch in the false front. The false front is centered in the opening to create an even gap all around. Then attach it from the inside with screws .

BRING IT ALL TOGETHER. As the drawing to the right shows, installing the back is pretty straightforward. Once the back is slid in place, you can screw the stand to the case (detail 'a'). All that's required for the finish is two coats of lacquer.

After the finish is dry, get a friend to help you move the bookcase from the shop to its final home. Make sure to have a favored libation on hand as payment to your helper. It is, after all, proper shop etiquette. W

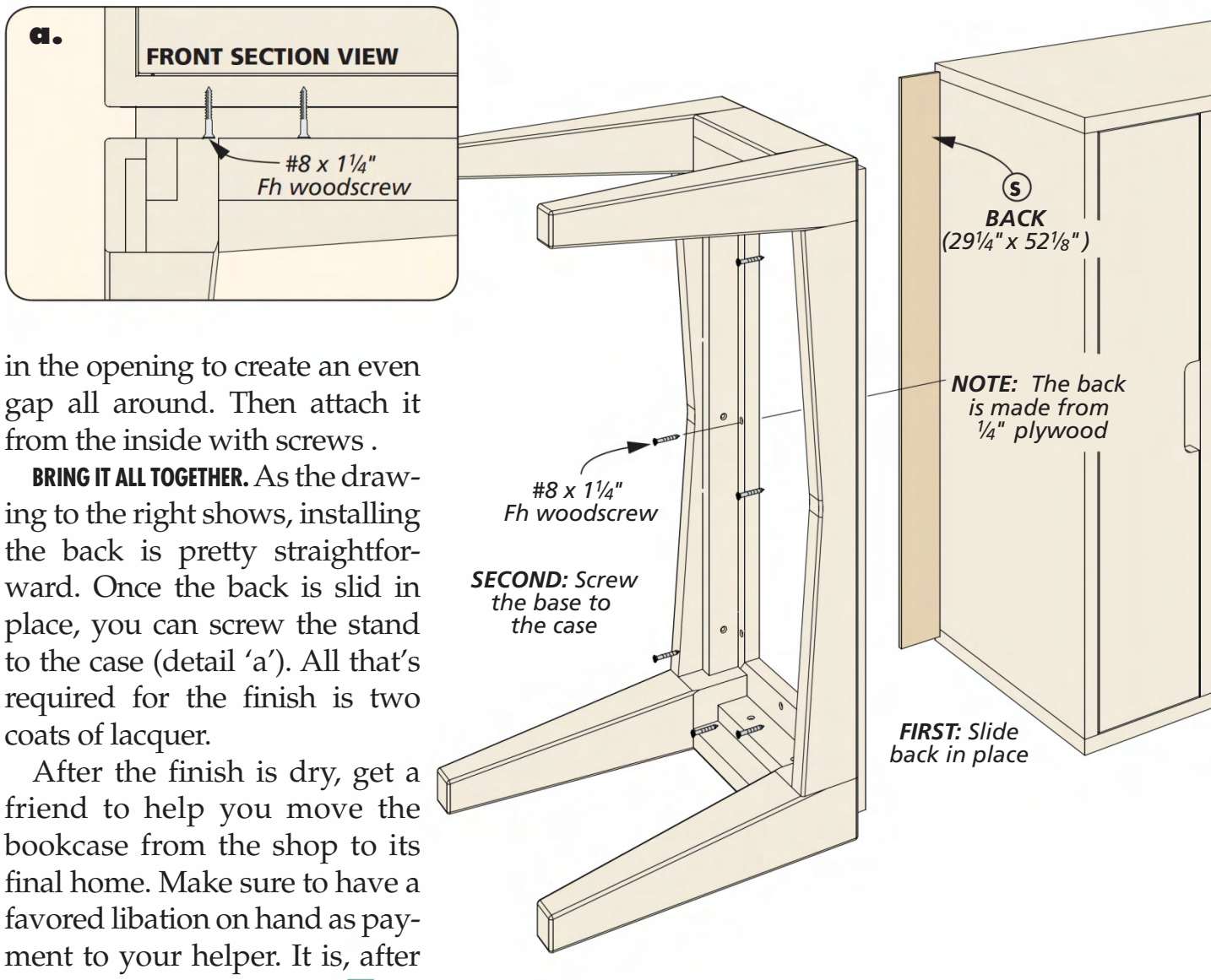

Materials, Supplies & Cutting Diagram

A	Sides (2)	¾ x 14 - 52½	**I**	Long Rails (2)	1 x 2¾ - 27	**Q**	Drawer Bottom (1)	¼ ply.- 12 x 27
B	Bottom (1)	¾ x 13½ - 29¼	**J**	Short Rails (2)	1 x 2¾ - 11	**R**	False Front (1)	¾ x 5⅞ - 28⅜
C	Drawer Shelf (1)	¾ x 13½ - 29¼	**K**	Long Fillers (2)	¾ x 1½ - 24½	**S**	Back (1)	¼ ply.- 29¼ x 52⅛
D	Lower Shelf (1)	¾ x 12½ rgh. - 29¼	**L**	Short Fillers (2)	¾ x 1½ - 8½	•	(2) 3"x 3"x 35½" Leg Blanks	
E	Middle Shelf (1)	¾ x 11 rgh. - 29¼	**M**	Long Risers (2)	¾ x 2½ - 28½	•	(20) #8 x 1½" Fh Woodscrews	
F	Upper Shelf (1)	¾ x 9¾ rgh. - 29¼	**N**	Short Risers (2)	¾ x 2½ - 13¼	•	(8) #8 x 1¼" Fh Woodscrews	
G	Top (1)	¾ x 9½ rgh - 29¼	**O**	Drawer Front/Back (2)	½ x 4½ - 27	•	(4) #8 x 1" Fh Woodscrews	
H	Legs (4)	2¾ x 2¾ - 14	**P**	Drawer Sides (2)	½ x 4½ - 12½	•	(1pr.) 12" Drawer Slides w/screws	

¾" x 7½" - 120" Maple (Two boards @ 6.3 Bd. Ft. each)

¾" x 7½" - 120" Maple (Two boards @ 6.3 Bd. Ft. each)

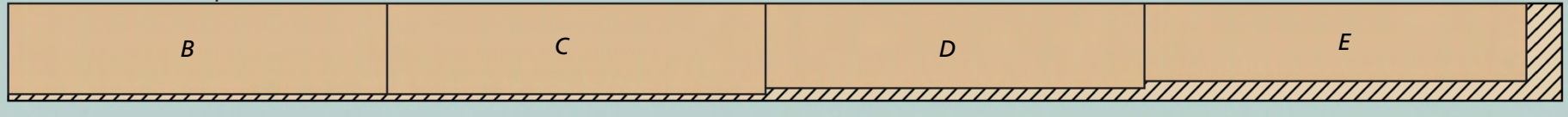

¾" x 8" - 96" Maple (Two boards @ 5.3 Bd. Ft. each)

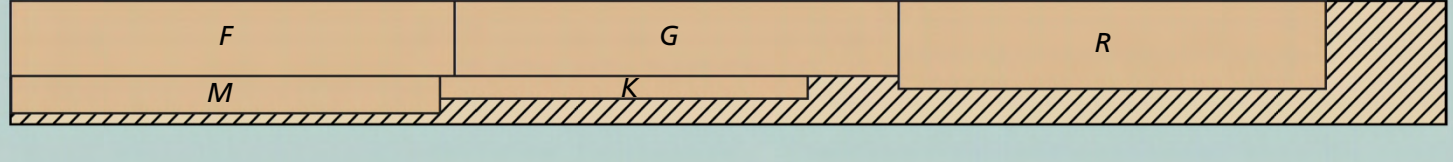

ALSO NEEDED: *One 48" x 96" Sheet of ¼" Maple Plywood*

½" x 5" - 48" Maple (Two boards @ 1.7 Sq. Ft. each)

1" x 4" - 48" Maple (Two boards @ 1.7 Bd. Ft. each)

Router Fence

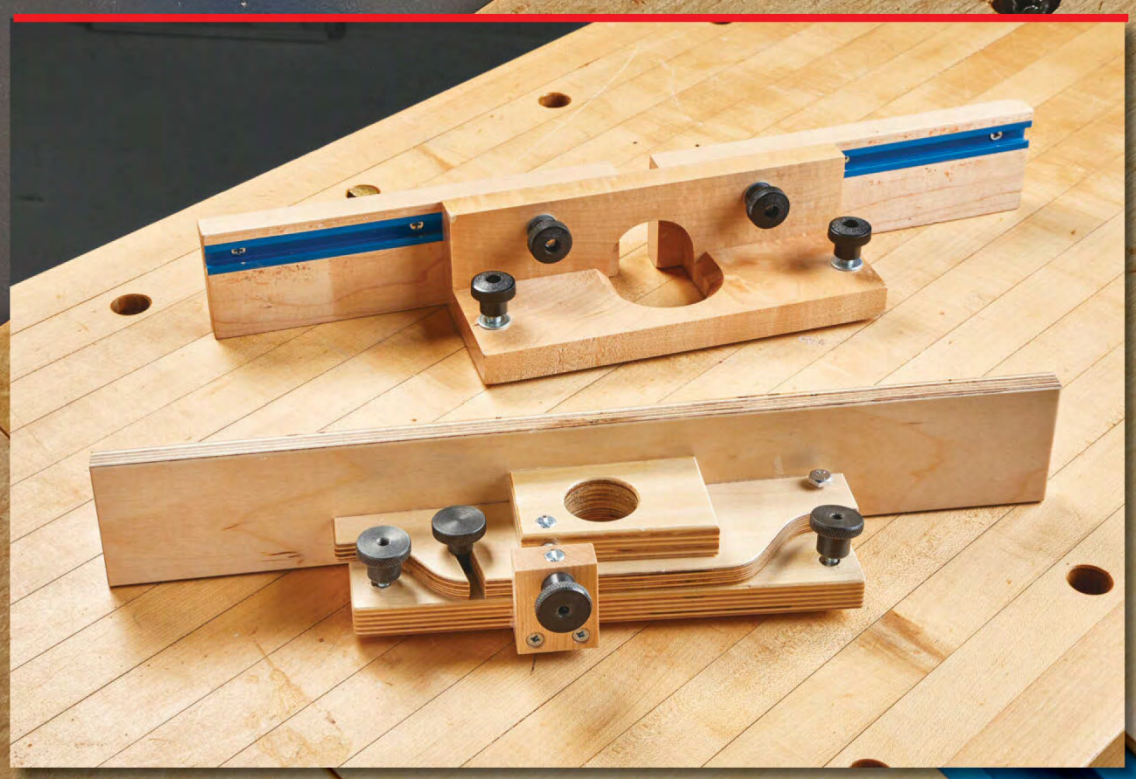

The original fence (top) has sliding faces that allow the fence to fold and stow inside the router table. The new fence has a smooth, continuous fence face that incorporates a micro-adjust feature along with dust collection.

Written by: Phil Huber; Project Design: Phil Huber & Dillon Baker

Turn the knob on the back of the fence to shift the fence face forward or back in fine increments. The fence face pivots on a bolt (shown at the upper right). Lock the fence position in with the center knob.

Illustrations: Dirk Ver Steeg

Upgrade your router table with a compact fence design that's easy to micro-adjust and includes dust collection.

The story of this router fence weaves three strands into a fun-to-build project. The first strand consists of a compact router table featured in *ShopNotes* magazine. Ken Munkel designed it for small routers and it works phenomenally. The table plans include a fence that rides in T-track in the top. It's designed with sliding, adjustable faces.

For the second thread, I recently built a version of that table to go with a new compact router for my home shop. The only shortcoming (in my opinion) of the table is that the fence isn't easily adjusted in fine increments. Sure, you can use a mallet to "micro-adjust" the fence. But I wanted a little more control.

The final strand is Pat Warner, a furniture maker and grand admiral of router jigs (*Google* his router fence — Wow!). He had a way with making jigs work right and maximizing control. The fence I came up with (after a few prototypes) includes a heaping dollop of his influence.

Here's how the fence works. Knobs and bolts in the base slide in T-tracks in the router tabletop. To provide fine control for adjustments, the fence face pivots on the outfeed side and is controlled by a studded knob. Altogether, you have about 1" of adjustment.

The continuous laminate fence face accommodates most bits. In back, a dust port tames the mess. The fence is mostly made from plywood and the footprint is minimized to work with a small router table.

Before we dive into the construction, I want to talk about the dimensions and sizing of the fence. While the dimensions you'll see are to make this fence fit the compact router table, I hope you can see past those numbers and apply the design to whatever type of router table you have. Send us photos, please!

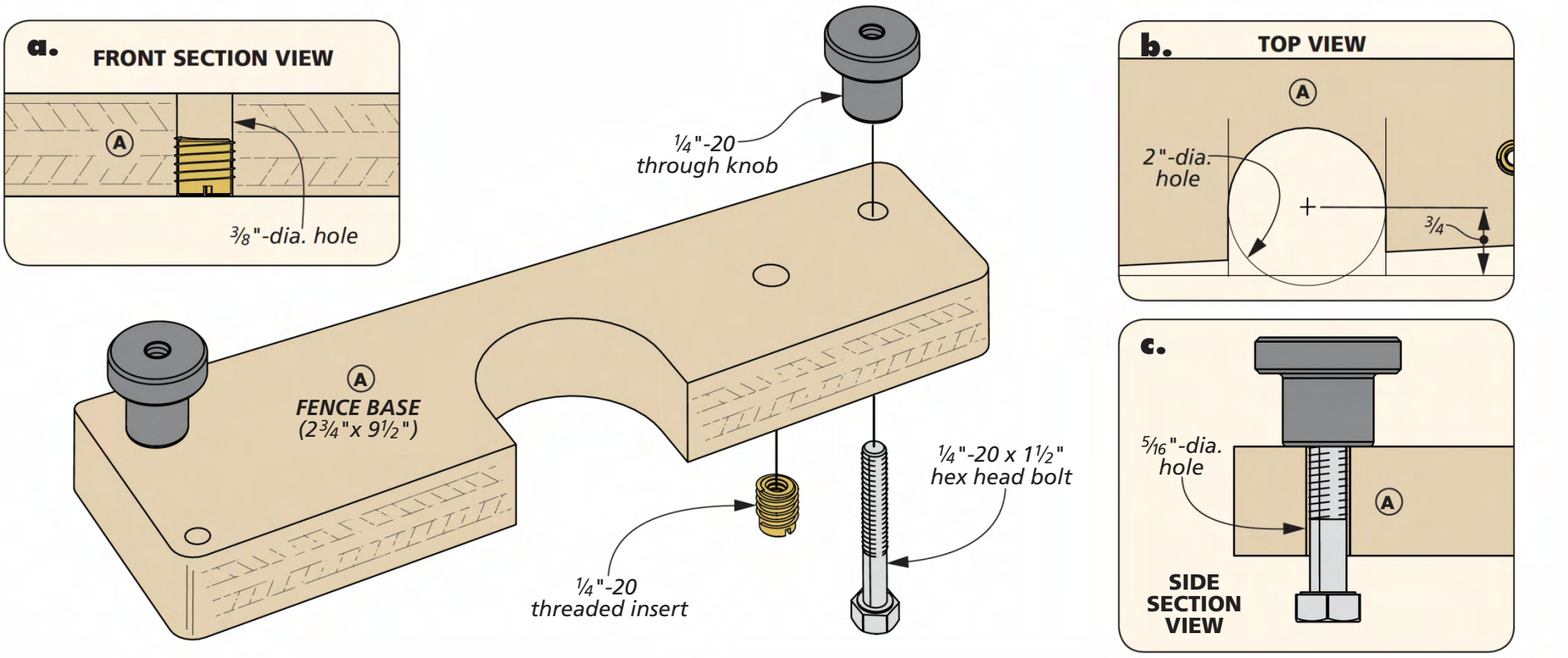

NOTE: Base is made from 3/4" plywood

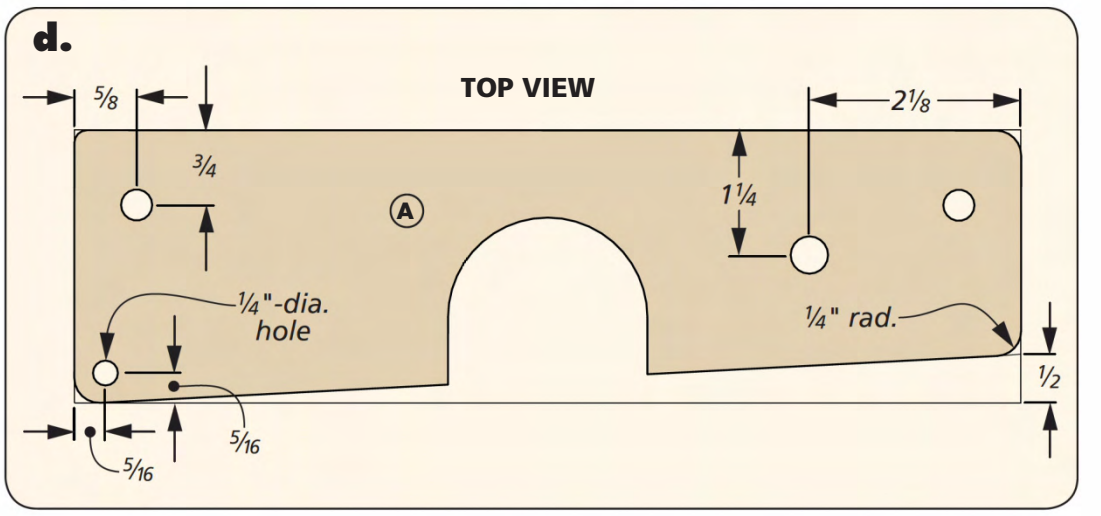

Tapered plywood **BASE**

Construction of the fence begins with a base and works up from there. The base is a narrow piece of 3/4" plywood. With the piece cut to overall length and width, take the time to drill a few holes. The first pair of holes accept hex bolts, washers, and knobs to attach the fence to T-tracks in the table top (details 'c' and 'd').

The location of these holes depends on your table, as in the box below. Alternately, take a look at page 55 to see how to adapt the fence to two other common table setups.

The next pair of holes is for attaching and adjusting the pivoting fence assembly. On the left end, drill a hole that serves as the pivot point. It's sized to match the shank of a bolt. Aim for a slop-free fit.

THREADED INSERT. Near the other end, the base has a threaded insert that's used to lock the adjustable portion of the fence in place, as in detail 'a.' Not all threaded inserts require the same size pilot hole, so check your insert before committing to drilling a hole based on the dimensions shown here.

BIT OPENING. There's one final hole to drill. This one forms the end of a wide slot that allows you to recess a bit into the fence, like when you need to rout a profile (detail 'b'). The slot gets covered later and then serves as a channel for dust removal. I sized this hole so it's just wider than the largest router bit I planned to use in the table.

After drilling the hole, use the edges of the hole to mark lines to complete the slot. Cut close to the line with a band saw or handsaw, then smooth the edges with files and sandpaper.

TAPERED EDGE. The front edge of the base tapers from left to right, as shown in detail 'd.' This creates clearance for the adjustable portion of the fence. I marked this line and cut it at the band saw. An edge sander (or a hand plane) cleans up the line. Ease the back corners and front left corner to eliminate sharp edges and give the base a more finished appearance.

FITTING THE BASE

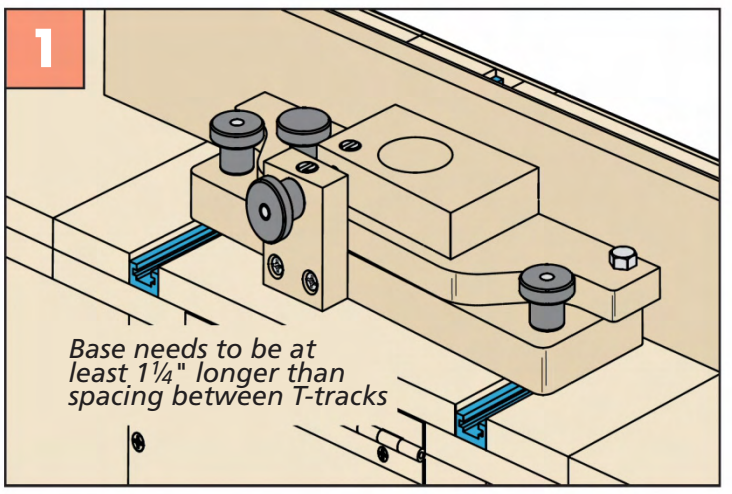

Base & Holes. The essential part of creating the base is measuring the spacing of the T-tracks on your router table top.

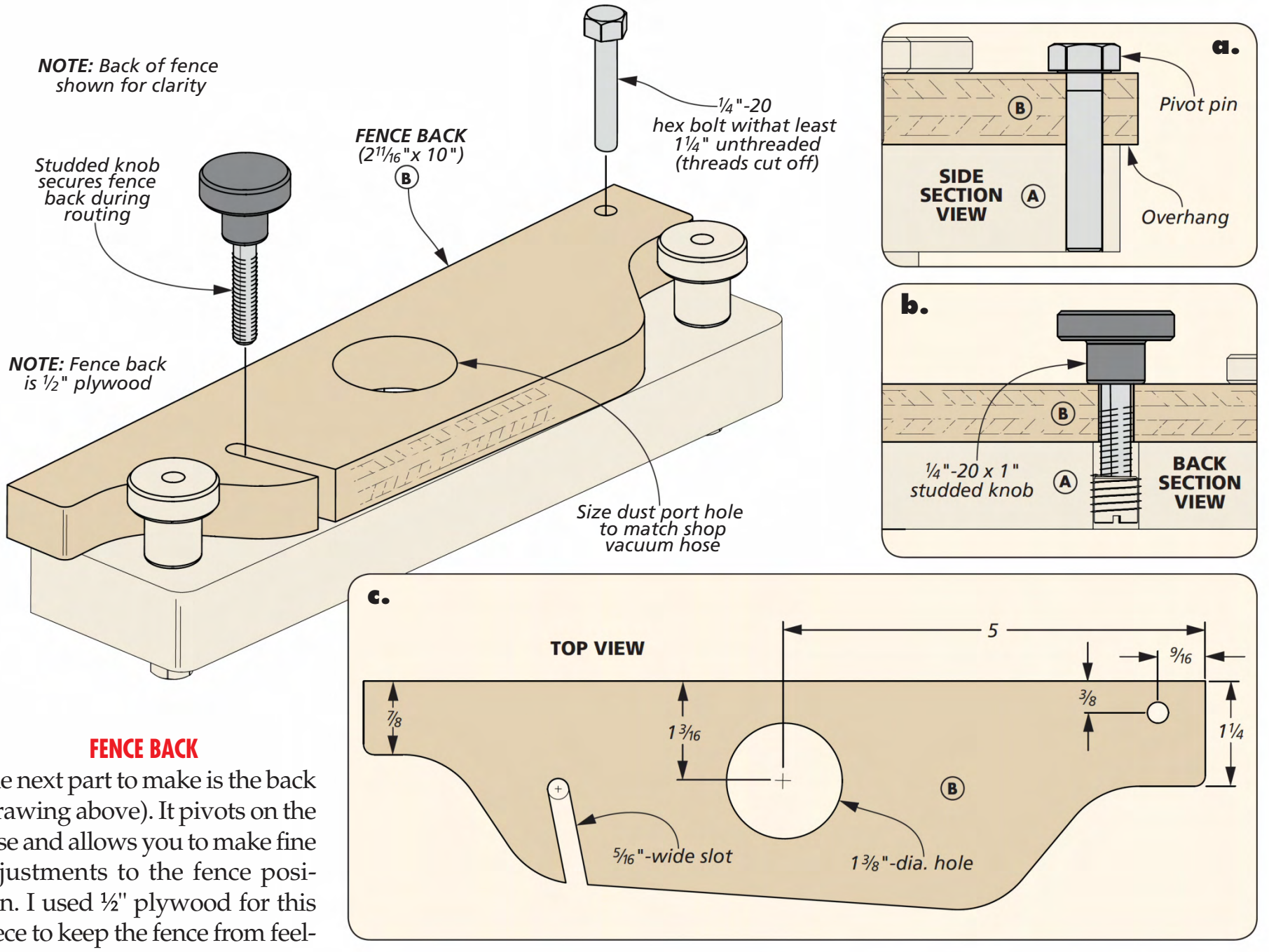

FENCE BACK

The next part to make is the back (drawing above). It pivots on the base and allows you to make fine adjustments to the fence position. I used ½" plywood for this piece to keep the fence from feeling too large.

Most of the work done on this piece involves drilling. A hole drilled on the outfeed end aligns with the pivot hole in the base, as in detail 'c.' It's located so the fence back overhangs the base to prevent binding, as in detail 'a.'

ANOTHER SLOT. Along the right back edge, an angled slot accepts a lock knob to secure the fence back after adjusting. The end of the slot is drilled out to align with the threaded insert in the base, as shown in detail 'b.' The angle of the slot approximates the radius to the pivot hole. The box at left walks you through the steps.

DUST EXTRACTION. Near the center of the back, drill a hole to extract dust and chips. Size this hole to match your shop vacuum. The hole is located so that no matter the position of the fence, the hole will be over the slot in the base.

The ends of the fence back are cut out to create space for the knobs that attach the base to the router table (detail 'c'). While utilitarian notches would suffice, I added some curves and styling to make it look good to my eye (check out the online pattern).

MAKING AN OPEN-ENDED SLOT

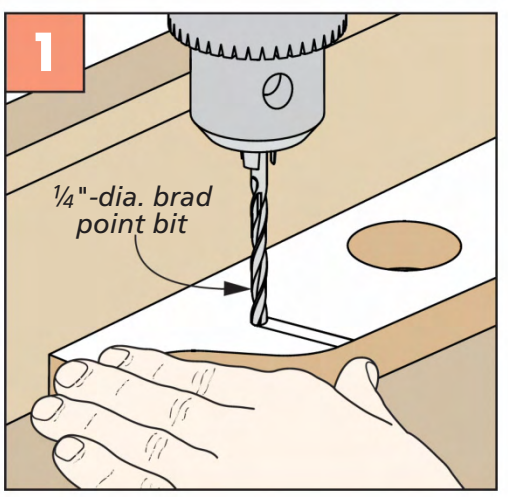

Drill the End. Lay out the slot location, then drill the end of the slot with a brad point bit.

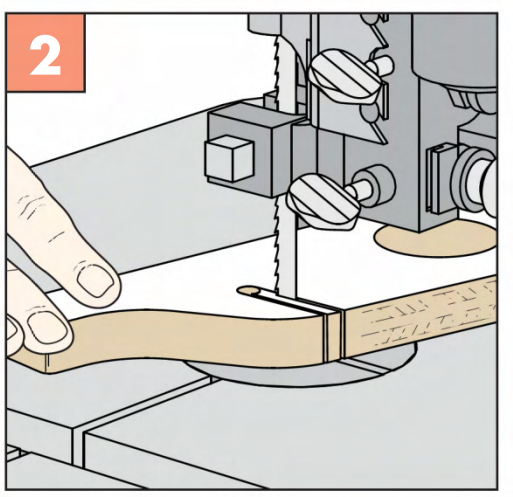

Saw & Smooth. Cut the edges of the slot following the lines. Then sand away the blade marks.

Dust hose

¼"-20 cross dowel

Ⓒ FENCE CAP (2⅜"x 3⅝")

¼"-20 cross dowel (threads drilled out)

NOTE: All parts are ¾" plywood

¼"-20 lock nut

Ⓓ ADJUSTER BLOCK (1½"x 2")

NOTE: Epoxy threaded rod into knob to create a custom knob

¼"-20 x 3" threaded rod

#6 x 1¼" Fh woodscrew

¼"-20 through knob

a. FRONT VIEW

1/16

5/16

3/16"-dia. prior to tapping

¼"-dia. clearance hole

b. SIDE SECTION VIEW

1¼

5/8

25/64"-dia. hole

5/16"-dia. hole

3/8

c. TOP VIEW

Position cap so dust holes align

Locate block so cross dowels are aligned

3/8

1/2

3⅜

Fine adjustment **SYSTEM**

The fence base and back provide the main structure of the fence. At this time, we need to work on the mechanism that allows you to fine-tune the fence position. The hardware that the comprises the system is housed in a pair of small blocks that you need to add to the base and back.

FENCE CAP. The first of these pieces is the fence cap, as shown in the drawing above. This cap piece sits on the fence back and serves a few functions. It adds thickness to the dust port for connecting a vacuum hose. The cap also increases the glue surface for attaching the fence face later on.

More importantly, it houses a cross dowel that's part of the fence mechanism. We'll get to that in just a bit.

DUST PORT. Once the cap is sized, you can drill the dust port hole. It's the same size as the hole on the face back (Figure 1 on the top of the next page). The key is the location. Keep in mind that the front edge of the cap is flush with the front of the fence back, as shown in detail 'c.'

CROSS DOWEL. Installing the cross dowel actually requires drilling two holes. One hole in the top face accepts the cross dowel itself. You want a close match here for the best function of the adjuster (detail 'c').

I purchased cross dowels to make the fence. However, this piece of hardware is easy enough to make yourself. The box on the following page walks you through the steps.

The other hole is drilled into the edge of the cap to accept the studded knob, as in detail 'b' and

DRILLING SAFE ACCURATE HOLES

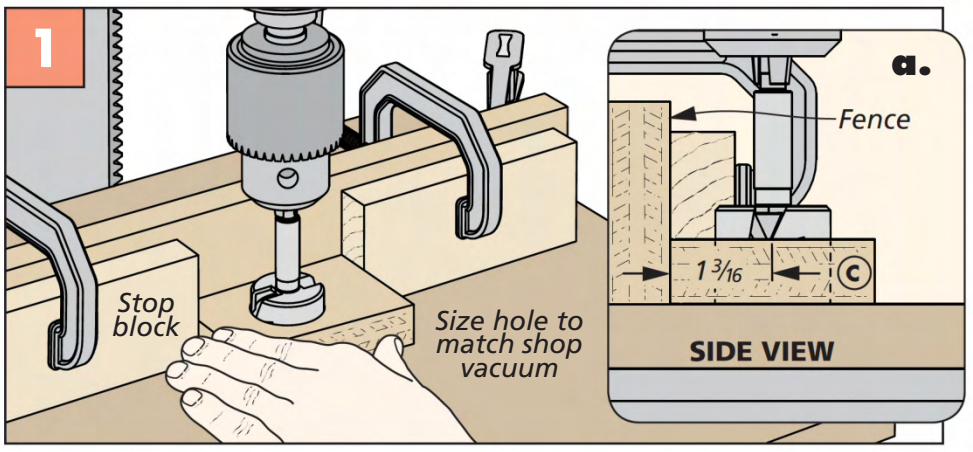

Drill a Big Hole. To hold a small piece at the drill press, a fence and stop blocks increase control. Use the same drill bit as you used to make the dust port hole in the fence back.

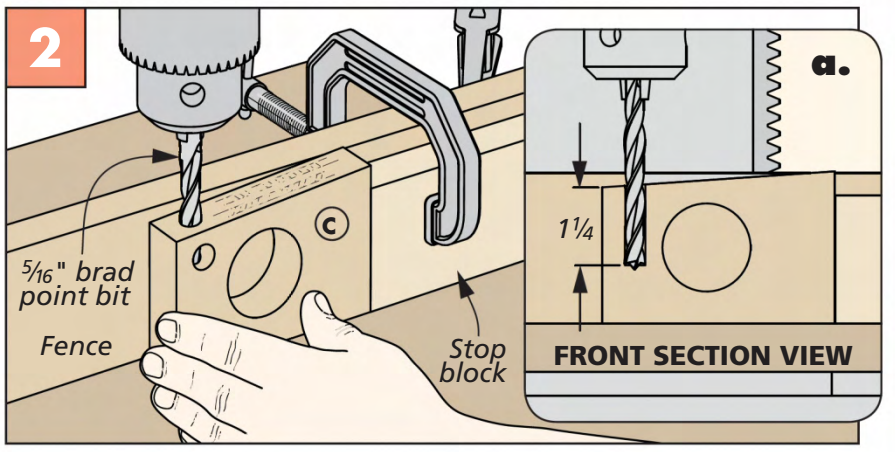

Clearance Hole. Drill a clearance hole in the cap that's centered on the pilot hole for the cross dowel. Again, the fence and stop block improve accuracy.

Figure 2 above. It's larger than the size of the stud of the knob to accommodate the slight pivoting action of the fence. And you don't want the knob binding.

The cap is glued to the back. Make sure to align the dust holes as you apply clamps.

ADJUSTER BLOCK

With the fence back and base joined with the pivot bolt, you can make the adjuster block now. This small piece of plywood is the anchor point for a studded knob that's used to adjust the fence, as shown in the drawing on the previous page.

MORE DRILLING. The block has a hole that aligns with the clearance hole in the cap, as shown in detail 'b.' It also houses another cross dowel that the threaded knob passes through. So drill the hole for that, too.

The role of this cross dowel is simply to guide the threaded knob to follow the arc of the adjustable fence as you move it. This means that the threads in the cross dowel would be a hindrance. So I drilled out the threads to match the diameter of the threaded stud (¼"). It sounds more difficult than it is to do. I clamped the cross dowel in a bench vise (very similar to the process shown in Figure 1 below). I start with a bit that was slightly larger than the hole in the dowel. A few drops of oil kept the bit running smooth. Repeat with a larger bit until you get to the final size.

INSTALL THE HARDWARE. Pass the knob through the cross dowel in the block and install a lock nut on the back face. Tighten the nut so that you can still turn the knob while minimizing slop.

Now thread the knob into the cross dowel in the cap. Then you can drive screws to attach the block to the fence base.

MAKE A CROSS DOWEL

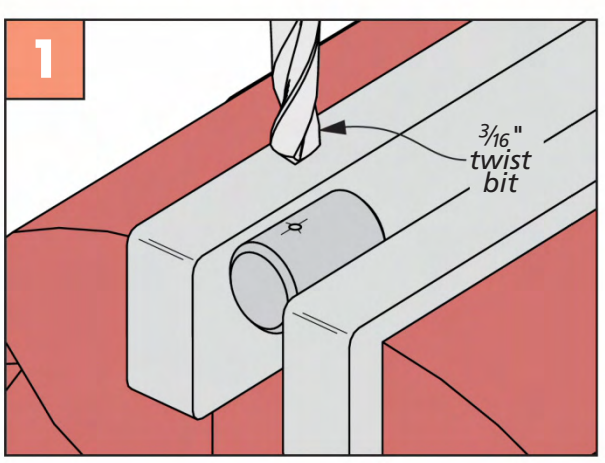

Pilot Hole. Mark the hole location with a punch so the bit can start cleanly. The hole is slightly smaller than the threads.

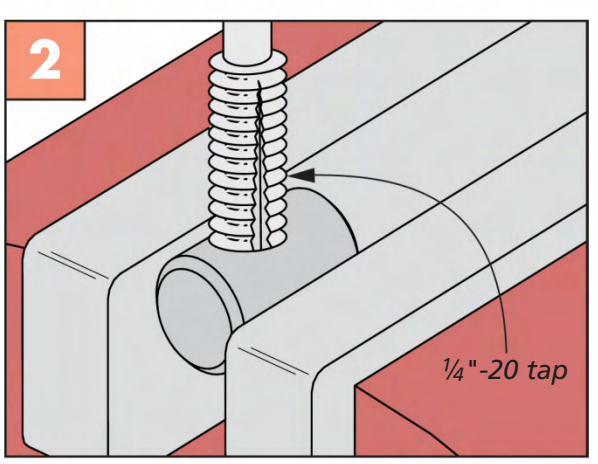

Tapping Threads. Take care to run the tap so it stays square to the hole. Lubricate the tap with cutting fluid.

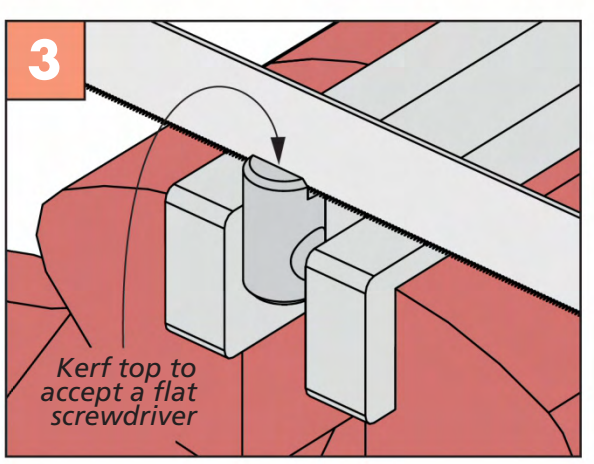

Guide Slot. Use a hack saw to cut a shallow slot across the end. This helps to align the cross dowel during installation.

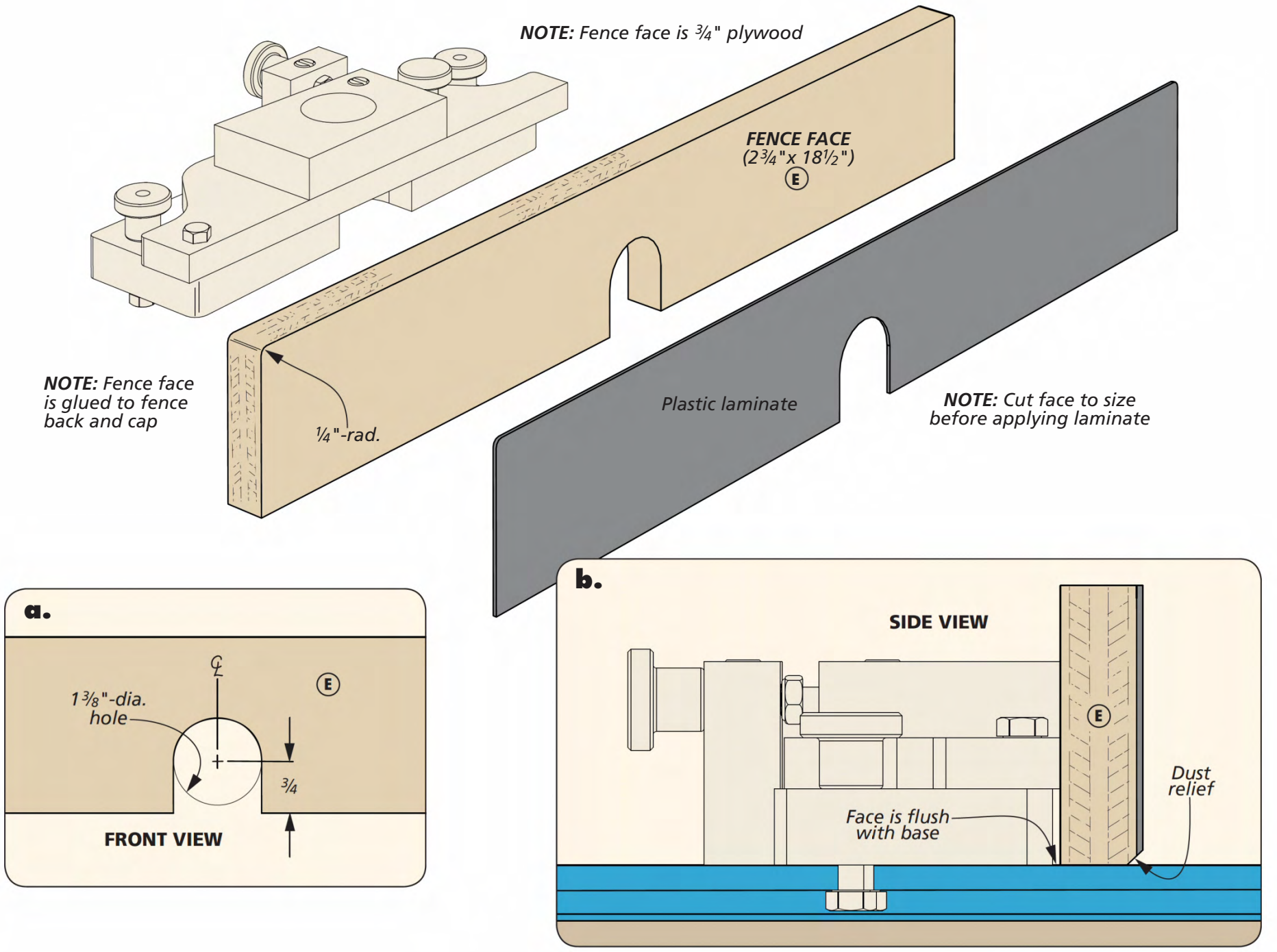

USING THE FENCE: TWO SCENARIOS

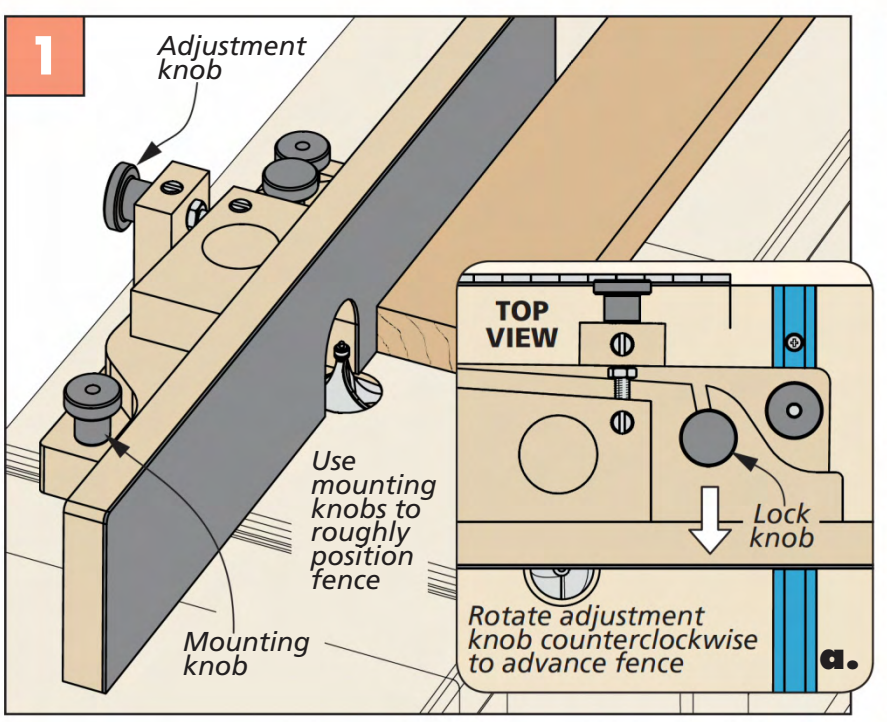

In the Ballpark. Roughly position the fence. Use the adjustment knob to bring the fence flush with bearing.

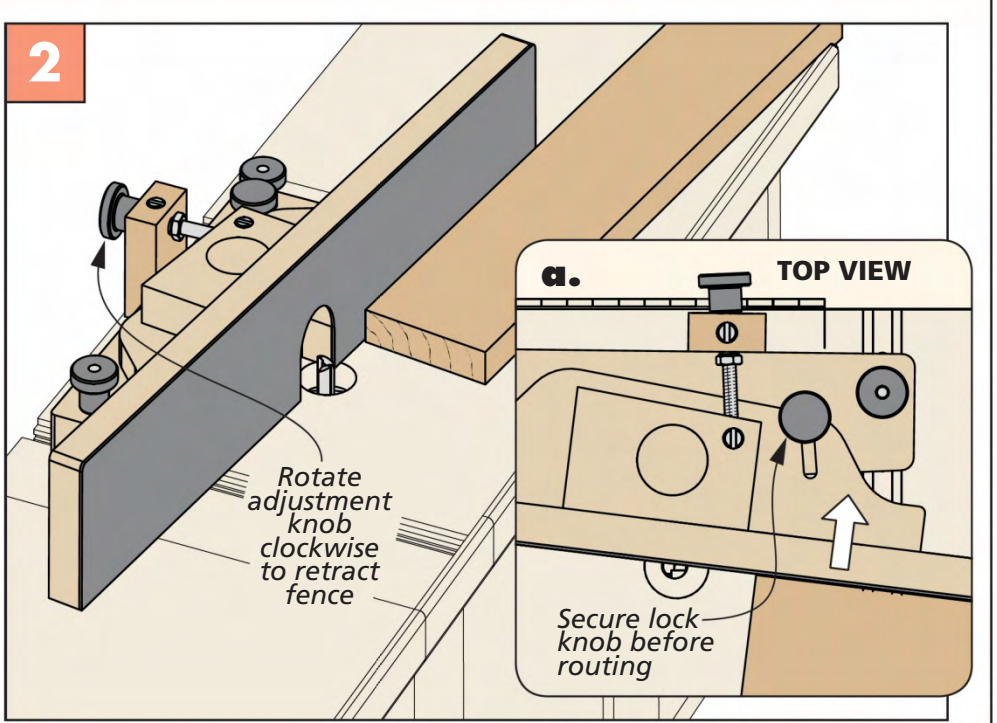

Dialed In. Use the adjustment knob to retract the fence to increase the width of rabbets (or grooves) without backrouting.

Completing the TABLE

The working part of the project is the fence face. You can see what I ended up with in the drawing on the previous page. The requirements for a fence face are few. In my book, all the face needs to be is straight and smooth.

This is also a place where you can freestyle. Make it as long and as tall as you like. I covered the front face with plastic laminate for smoothness and greater wear resistance, but a layer of hardboard works well, too.

BIT OPENING. Once the face is cut to size, create an opening in the face for the bit. I matched the width of the opening in the fence base.

Along the lower edge, it's a good idea to add a small chamfer or rabbet as a dust relief. It helps your workpiece run tightly against the fence during cuts.

ASSEMBLY. The face is glued to the back and block. But before you grab the glue bottle, clamp the face in place. Look where the bit opening meets the fence back and cap. I used a half-round rasp to ease the transition to allow better airflow for the dust and chips.

Glue the face so it's flush with the bottom of the base when everything is assembled. My usual practice is to apply a few coats of finish (wiping varnish or spray lacquer) to protect the plywood surfaces and keep things looking their best.

Then you can attach the fence to your router table with flange bolts or hex bolts. In use, these bolts and knobs handle the coarse fence adjustment.

For fine-tuning, lock these in place. Then use the threaded knob at the back to adjust the position of the face forward or back. You have nearly 1" of total adjustment capacity. The top knob locks the face assembly in position for a cut.

Precision in a compact, good-looking package. Not a bad way to upgrade a router table. W

MOUNTING ALTERNATIVES

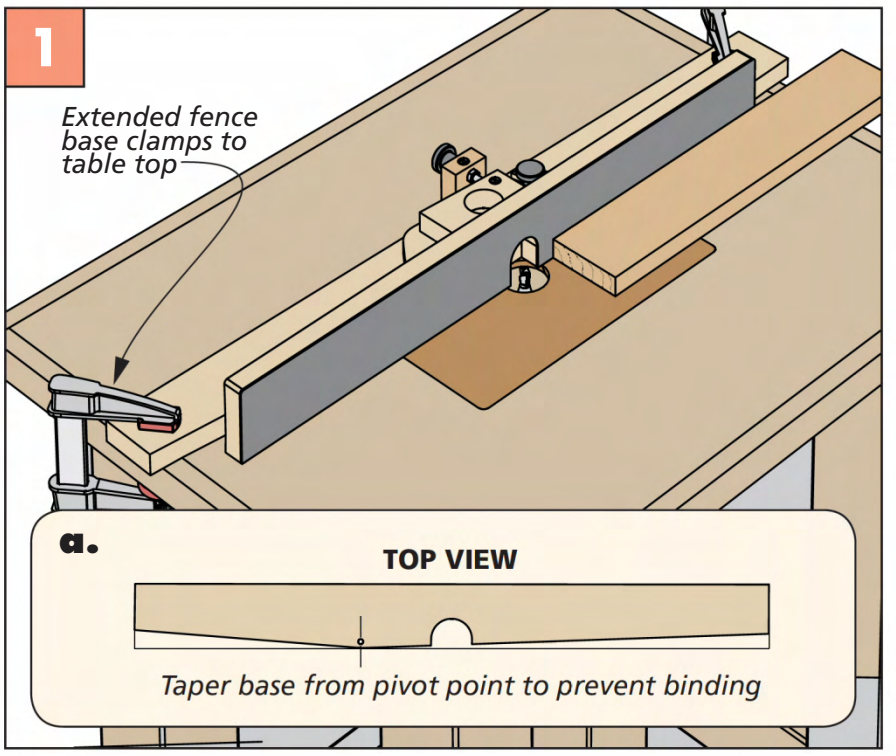

Clamp-On Fence. You can adapt the fence design to make a clamp-on fence. All you need to do is extend the base. Be sure to taper the front edge to allow the face to pivot.

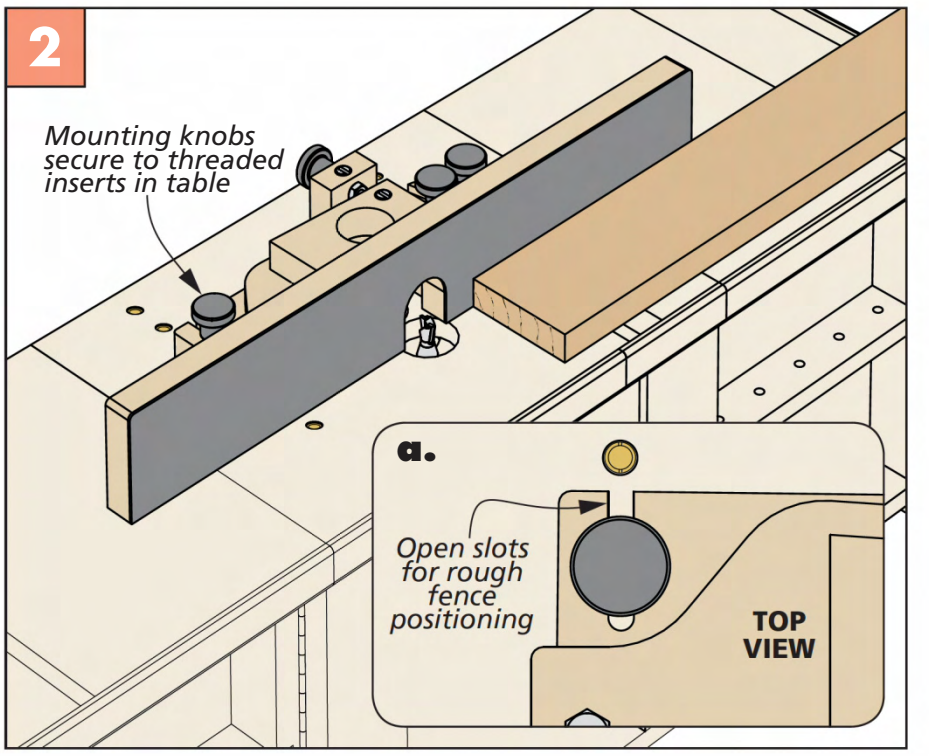

Threaded Inserts. Another common method for attaching the fence is to use a series of inserts in the table top. In this case, the mounting knobs fit in open slots rather than holes.

Materials & Supplies

A	Fence Base (1)	3/4 ply. - 2 3/4 x 9 1/2	• (3) 1/4"-20 Through Knobs	• (2) 1/4"-20 Cross Dowels
B	Fence Back (1)	1/2 ply. - 2 11/16 x 10	• (1) 1/4"-20 x 1" Studded Knob	• (1) 1/4"-20 Lock Nut
C	Cap (1)	3/4 ply. - 2 3/8 x 3 5/8	• (2) 1/4"-20 x 1 1/2" Hex Bolts	• (1) 1/4"-20 x 3" Threaded Rod
D	Adjustment Block (1)	3/4 ply. - 1 1/2 x 2	• (1) 1/4"-20 x 3" Hex Bolt (threads cut off)	• (2) #6 x 1 1/4" Fh Woodscrews
E	Fence Face (1)	3/4 ply. - 2 3/4 x 18 1/2	• (1) 1/4"-20 Threaded Insert	• (1) 3" x 20" Plastic Laminate

Routing Circles

There are all sorts of ways to cut circles out of plywood or lumber in your shop. In my shop, the band saw and jigsaw jump to the front. The problem is that they both leave you with rough edges to contend with. I don't mind sanding and smoothing curved edges, but there's a way to avoid all of that work — your router. Well, your router and a trammel.

As you see in the photo above it doesn't always have to be a fancy setup to give you a perfect circle with a finished edge. This simple trammel is nothing more than a piece of hardboard with a block glued to it. The block has multiple pivot holes for predefined circle sizes.

BUILT TO LAST

The trammel you see on the next page is dandy if you need to make large circles and curves. It's easy to build, inexpensive, and can be set just as quickly as the rip fence on a table saw. The secret is the arm — it's an aluminum ruler that I picked up at a hardware store.

As you can see in the Exploded View on the opposite page, this jig consists of three main parts: a base for the router, an aluminum ruler that acts as a pivot arm, and an adjustable pivot block that determines the size of the circle.

BASE. I started on the jig by making the paddle-shaped base shown in the Base Layout drawing on the next page. When mounting the router, the idea is to center it about 6" from the end of the base. And this isn't hard to do. The router's base is a ready-made template for laying out the shape of the base and then marking and drilling all the holes needed.

Written by: Erich Lage

BLOCKS. After cutting the base to final shape, you can turn your attention to a pair of hardwood blocks. One block attaches to the base and allows you to mount the ruler. The other one will become the pivot block that's used to determine the size of the circle you cut.

Since both blocks are the same size (and small), cutting a groove down the center to accept the ruler could be a challenge. To do this safely, it's best to start with an extra-long workpiece. Just make sure the depth of the groove is slightly less (1/32") than the thickness of the ruler.

Once the groove is complete, you can cut two blocks from the blank. Then glue one block to the base flush with the back edge.

PIVOT BLOCK. To create the pivot block, the second block is glued to a ¼" hardboard spacer. The spacer raises the pivot block to match the height of the mounting block on the base.

The next step is to drill three holes down the center of the pivot block. The outside holes are used to attach a hairline indicator (added later).

The center hole is for the pivot pin. This pin is just a cut-off bolt that's glued in place with epoxy.

▲ Drill a shallow ¼" hole for the pivot pin in the back side of the workpiece. Slide the pivot block along the ruler to match the radius you want. Then lock the pivot block in place. Set your router bit for shallow passes and drop the pivot pin in place. Finally, rout in a counter-clockwise direction.

INDICATOR. The key to this jig is the hairline indicator that's added to the pivot block. The indicator allows you to lock the ruler securely to the pivot block. Also, you can accurately set the radius of the circle by aligning the hairline over the ruler.

After cutting the indicator to size, drill a pair of holes to match the outside holes in the pivot block. Then scribe a hairline on the indicator, so it lines up directly over the pivot pin.

ASSEMBLY. Now you're ready to attach the ruler to the mounting block on the base. But first, you'll need to install the router bit you're going to use for cutting the circles. I like to use a ½"-dia. straight bit, but the important thing is that you always use the same diameter bit.

Now to find out where to attach the ruler, measure from the cutting edge of the bit to the back edge of the base.

To allow you to use the ruler to set the radius, position it so that dimension A" aligns with the back edge of the mounting block. Then screw the ruler in place.

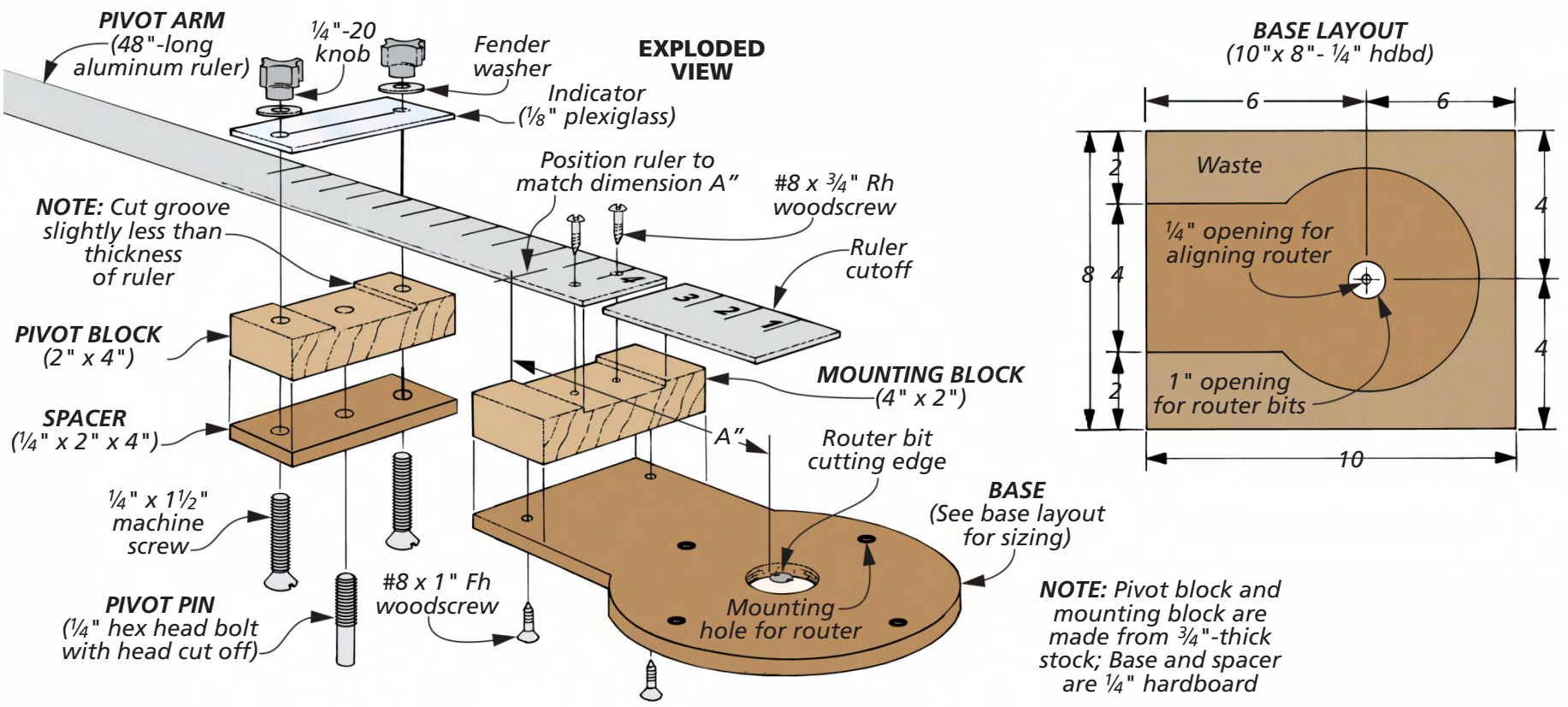

Illustrations: Bob Zimmerman

Routing circles at your router table takes a little bit of set up. Once done, making circles is easy.

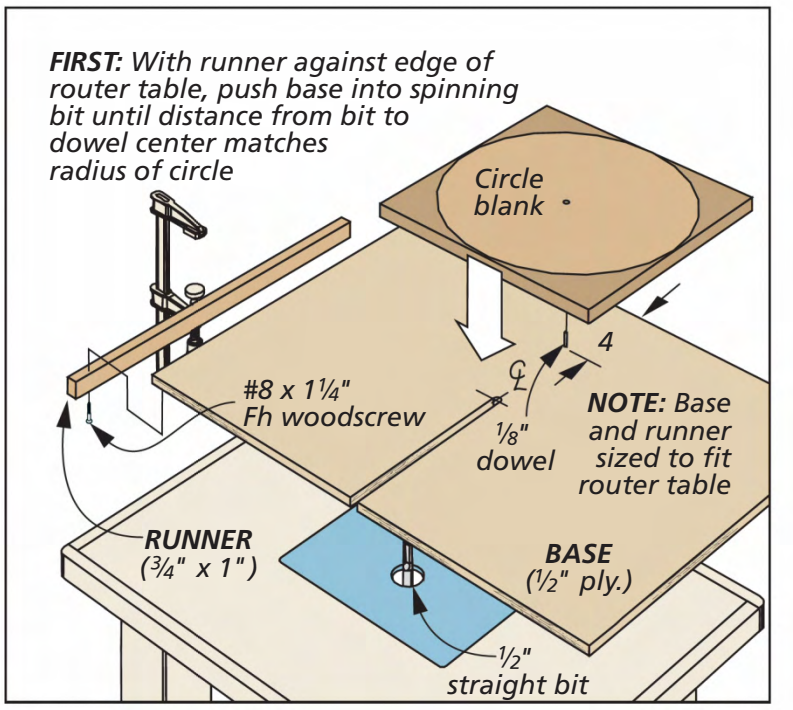

ROUTER TABLE

Here's a novel way of creating a circle without a trammel — making it on the router table. It's easier than you might think.

In order to make circles at the router table, all you need is a large plywood base (detail 'a'). A runner on the edge of the base rides along the side of the router table to let you rout into the base with control. And a dowel on the base creates a pivot point for rotating the workpiece above it.

You can cut circles of varying diameters with this method. Just cut into the base with the router bit until the distance from the center of the dowel to the edge of the bit matches the radius of your circle. Then clamp the base in place.

Next, cut the blank to size (again, detail 'a'), and drill a hole in the center of the blank to fit over the dowel in the base. With the blank in place, turn on the router, and rotate it counter-clockwise. A thick blank will need to be routed by raising the bit slightly between each pass.

SPECIALTY TRAMMEL

The trammel you see below is similar to the one in the lead photo. A simple hardboard trammel with multiple pivot holes. A while back we did a project for the kitchen — a pizza peel. One of the distinctive features of the pizza peel we made is the curved joint between the handle and the paddle. I cut these curves using a router and a ½"-dia. straight bit. And to make sure I routed a perfect arc on both pieces, I used the router trammel you see below.

The trammel is nothing more than a piece of ¼" hardboard mounted to the base of the router. It fits over a steel pivot pin to guide the router in a perfect arc. I used a finish nail with the head clipped off and the end filed as my pivot pin.

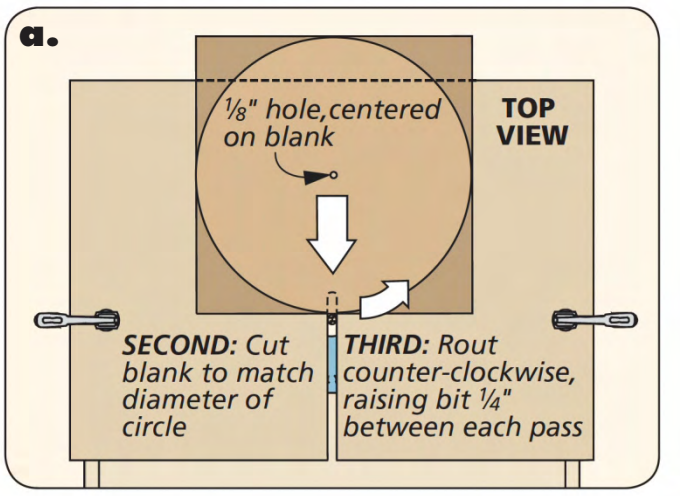

The radius of the curved joint between the handle and the paddle of the pizza peel is 4½". But because you'll be cutting both an outside arc and an inside arc, you'll need to make two pivot holes in the trammel — measuring 4½" from either edge of the bit. As you see in Figure 1, you'll use the outside pivot hole to rout the arc on the handle. Then use the inside pivot hole to rout the arc in the paddle. Figure 2 shows this. You'll drill the hole for the pivot pin in the waste area.

PIVOT BLOCK. One other thing: To avoid leaving a hole from the pivot pin in my handle blank, I drove the pivot pin into a block of hardboard that was taped to the blank. Then to support the router, I added a second hardboard block to the bottom of the trammel (Figure 1).

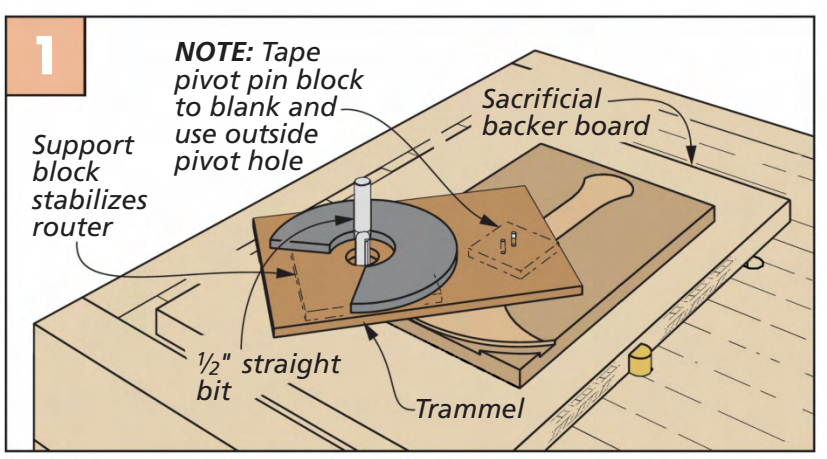

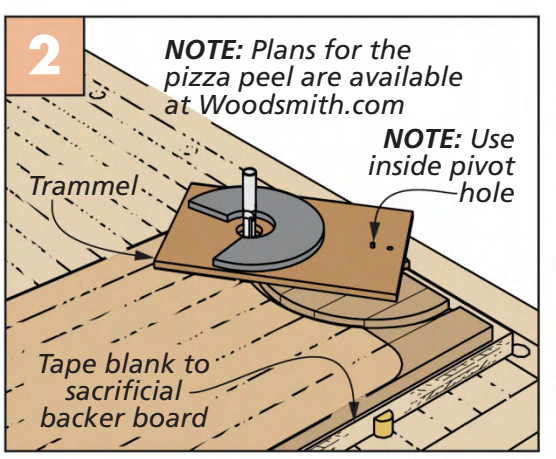

SMALL BUT STURDY

When the task at hand is working with smaller arcs and circles, this small, compact version is just the ticket. And it will last a long time as well.

This trammel is the perfect solution for cleaning up the edge of a circular workpiece cut at the band saw. You can see in the photo at right that a router is mounted at the end of the trammel's base. The guide's centering pin, which is adjustable to the radius of the workpiece (9½" maximum), is secured by a hole drilled in the bottom of a round workpiece. This allows the router to pivot around a stationary center point, creating a perfectly round circle.

MAKING THE TRAMMEL. You can start by shaping the baseplate from the pattern below. You can make the base as big as you like. Just apply the dimensions for the ends like you see below. The hole for the router bit at the one end of the trammel is chamfered to provide better visibility and chip clearance.

This trammel baseplate has a groove and slot to adjust the circle size, (drawing below). The purpose of the groove is to capture a flange nut that locks the knob (and pin) in place.

To make the thru-slot, I drilled ¼" holes at each end of the slot, then removed the waste between them at the router table.

As I mentioned, the centering pin is made from simple hardware items. It's just a 1½"-long ¼-20 bolt and a flange nut. To make it, clamp the bolt in a machinist's vise with the threads facing up. Then thread the flange nut all the way down to the smooth part of the shank. Using a wrench, tighten the nut securely. The goal is to keep the nut from loosening. Complete the pin by cutting the head off the bolt with a hacksaw and cleaning up the cut edge with a file. Detail 'a' shows you what this looks like.

Now you can drill the holes for your router and cut the base to shape as you see here. Then thread the centering pin into the locking knob, as shown in the drawing to the right.

That completes the last trammel. So, when it comes to making smooth circles and curves, you've got options now.

▲ Smoothing the edge of a circle was never easier. Drill a shallow hole in the underside of the for the pivot pin. Then loosen the locking knob and slide the bit in place.

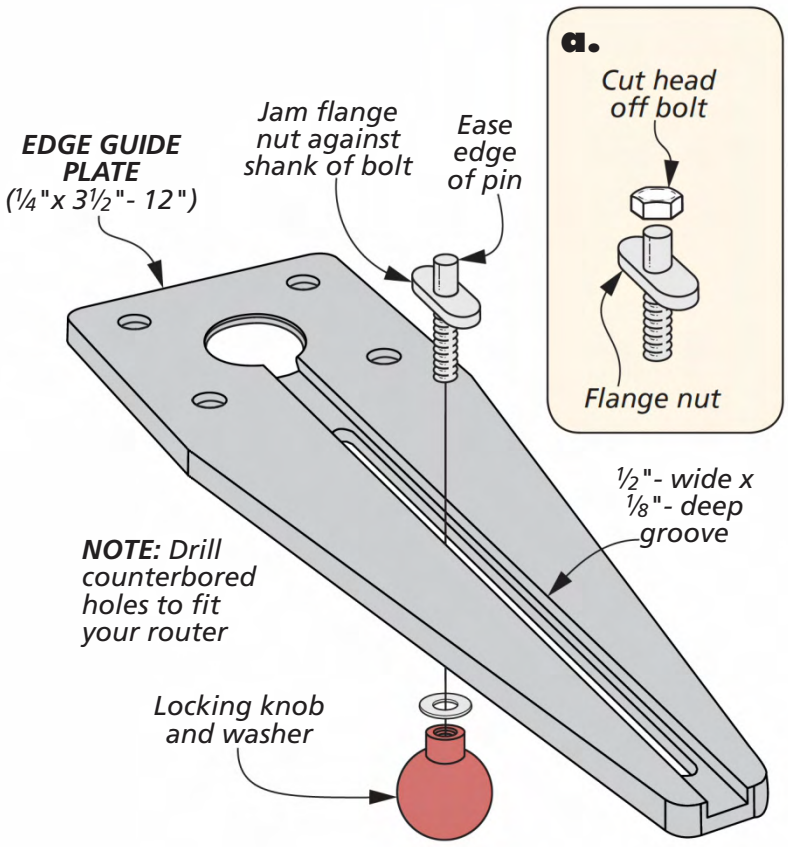

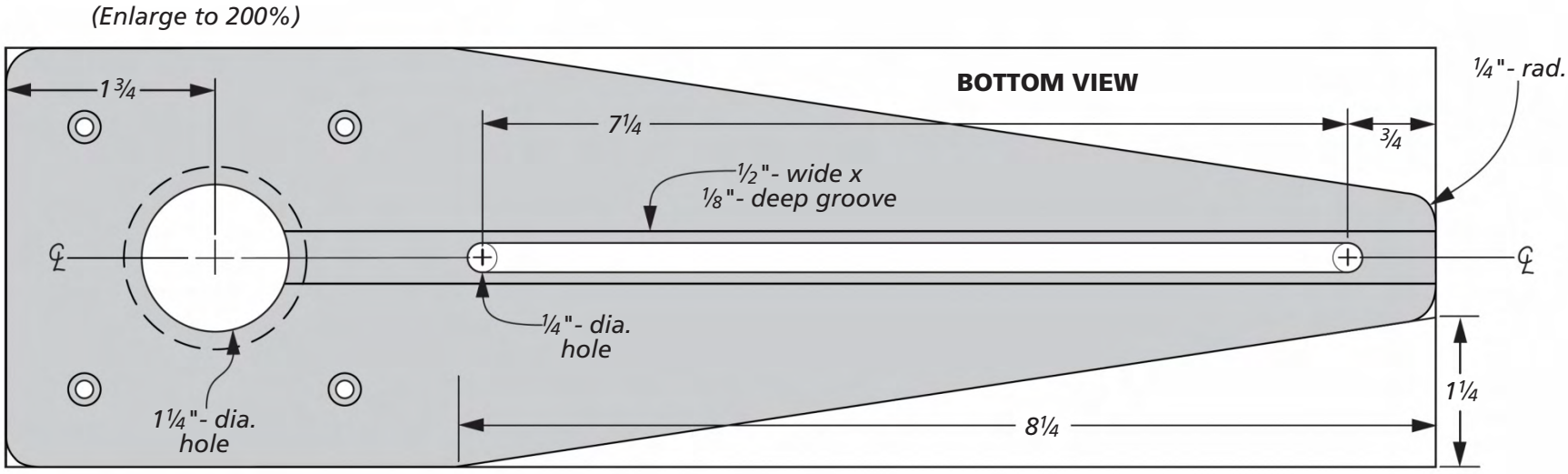

Using Hide Glue

One of the keys to a successful woodworking project is assembling all the parts into a whole that stands the test of time. More often than not, some type of adhesive is used to hold everything together. And one glue that's stood that test of time is hide glue. I know what you're thinking, hide glue is for traditionalists, or maybe you're thinking it's too troublesome to use. Well, I'm hoping to give you enough information about its uses and advantages to give it a shot on your next project.

Hide glue comes in different quantities, strengths, and clarities (left). The dried glue is bagged in pearl or crystal form, as seen below.

WHAT IT IS

Hide glue has been used by furnituremakers for centuries. It gets its name from the fact that the glue is made from the collagen protein found in animal hides (horse or cow hides). Traditional hide glue is usually sold in dry, granular form, like you see in the photo at left.

MAKING GLUE. Before it can be used, the glue must be soaked in water and then heated in a glue pot until it liquefies. Sounds like a hassle, right? Well, it's not as bad as it sounds and I'll talk more about that a little bit later.

ADVANTAGES. First I'd like to give you some reasons to use hide glue. One of the key reasons to use hide glue is that the glue bond can be reversed by soaking the joint in warm water, making it possible to disassemble a joint, if necessary. For this reason, hide glue is used by musical instrument makers and restorers of antique furniture.

Another advatange is that hide glue doesn't "creep" like yellow (PVA) glue. And unlike yellow glue, it also sands easily and will accept most stains and finishes.

Despite these advantages, the major downside for most woodworkers, as I mentioned earlier, is that traditional hide glue has to be mixed and heated before use.

A couple others are it tends to set up within minutes (which is a plus in some cases), and once mixed it has a limited shelf life.

LIQUID HIDE GLUE

To get around these inconveniences, *Franklin International* developed a liquid hide glue

Written by: Bryan Nelson

product in 1935, as shown in the photo below. By adding urea and other chemicals to traditional, hot hide glue, the glue remains liquid, even when it's at room temperature. This means you can use it straight out of the bottle, just like a standard glue.

Another brand of liquid hide glue is *Old Brown Glue*, which is shown in the photo at right. *Old Brown* is a little closer to traditional hide glue in that the only extra ingredient is urea. Unlike *Titebond*, which stays liquid at most temperatures, *Old Brown* will gel when the temperature gets below about 80 degrees. To get it ready for use you'll need to keep the bottle in a jar of warm water while you're working with it, as in the right margin photo.

OTHER ADVANTAGES

The convenience of use is the main advantage of liquid hide glue, but it also has some other advantages. The key one for me is its longer open time. *Titebond* hide glue doubles the open time (the time you need to join pieces together) of typical yellow glues to around 6-8 minutes and *Old Brown* is a 30-minute open time.

If you've ever had a complex project to assemble, you can appreciate the advantages. The extra working time gives you a better opportunity to position parts just right and then tighten all of the clamps before the glue starts to set up.

Another upside is that for most wood species, the glue lines will blend perfectly. And if you do end up with any glue smudges, the hide glue will be nearly invisible, even after you apply a stain or finish to the project.

DOWNSIDES

As you might expect, there are a few disadvantages. For starters, you'll need to keep your clamps in place longer. This gives time for the water to evaporate. I plan assemblies at the end of the day. This way, everything can dry overnight and I won't get anxious to continue when I shouldn't.

The reversability of the glue joint with heat and water means that's it's best to use hide glue for indoor projects. And the additives used to create liquid hide glue decrease its strength, but I've never found this to be a problem. The glue is still strong enough for most furniture projects.

One thing I do make sure to be aware of both when buying and using liquid hide glue is its shelf life. Like any glue, liquid hide glues aren't good forever.

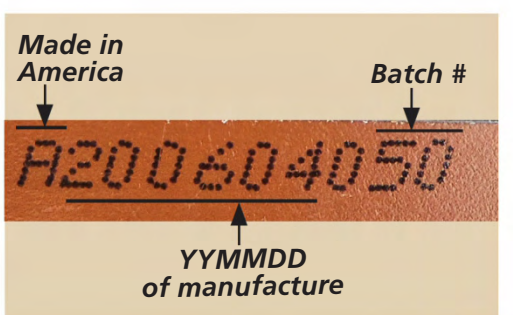

Titebond is ready to go out of the bottle and doesn't require warming. You'll need to decode the manufacturing date (inset) of the glue to ensure you're within the recommended two-year timeframe.

Old Brown goes on more easily by keeping it in a jar of warm water (upper photo). The expiration date is key to ensure the glue is still good (lower photo).

Old Brown advertises an 18-month shelf life and they print the "Good Until" date right on the bottle. A quick glance at the bottle is all it takes to know if the glue is still good for use (margin above).

Titebond has a shelf life of 24 months. You'll need to decipher the code printed on the bottle to determine when it was made, though. In the code shown at left, the 'A' means it was made in America. The next six digits designate the YYMMDD of manufacture. So this bottle was manufactured on September 4, 2020, making it good until that same date in 2022. The last three digits are the batch number.

Finally, liquid hide glue costs a little more. In the grand scheme of things, the difference isn't enough to make it a key decision in choosing which glue I'm going to use on a project.

That covers liquid hide glue, but I did promise to get back to basic hide glue. For more on using it, turn the page.

THE PROCESS

I've found liquid hide glue to be the best option for the type of work I do since it offers many of the benefits as hot hide glue, like reversibility. But working with hot hide glue allows you to choose the characteristics you need for the task at hand. Plus, you can make exactly what you need using a simple process.

CHARACTERISTICS. While you can get down in the weeds learning about hide glues, in my opinion there are really two key characteristics woodworkers need to keep in mind. And that's hide glue's gram strength and clarity.

Hide glue comes in a wide range of gram strengths. The higher the gram strength, the stronger the cured glue is and the shorter its working time. This gram strength range varies, but most woodworkers will typically use hide glue with a gram strength of 192 or 251.

A gram strength of 251 will set up in about a minute, which is great for gluing up panels (more on this later). I like a little more working time so I like the 192.

As for clarity, a high clarity hide glue will have less visible glue lines. This is important for lighter colored woods.

GETTING STARTED. Hide glues will typically come with instructions, but they boil down to a simple process of soaking the hide glue in cold water until all the water has been absorbed by the glue and then heating up the mixture. Of course, there are a few details that will help make the process a success.

Following the ratio of water and glue recommended by the manufacturer is a good starting point. Add the glue to the water, stirring it in as you go to ensure everything is thoroughly mixed.

SOAKING. Each hide glue has a recommended ratio of water to glue. For the 192 I use, that ratio is around 2 parts water to 1 part glue. The water should be cold and clean. To minimize any clumping and speed the process along, add the water to the glue pot and then slowly add the glue, stirring it into the water as you do this (photo above).

After you've done this a few times, you'll find that you can simplify the process by adding the glue to the pot and then adding just enough cold water to cover the glue. This ends up being pretty close to the correct ratio and avoids the hassle of the measuring process.

ADDING THE HEAT. Once the glue absorbs the water it'll look a bit like a gel, as shown in the lower left photo. Next, plug in your glue pot and let things heat up for 10 to 15 minutes.

The mixture dissolves quickly in the range of 110 to 150 degrees and will have a consistency of warm maple syrup (lower right photo). Just be sure to avoid heating the glue above 150. Besides increasing the evaporation rate of the water, it affects the protein in the glue and weakens the bond.

You'll need to give the glue and water time to combine. When the mixture "gels" up, you're ready to turn it into hot hide glue.

Adding heat is the final step to creating hot hide glue. A dedicated glue pot is great, but a simple double boiler setup works as well. The key is to maintain a temperature of about 140 degrees.

To ensure you have time to assemble multiple joints for a project, you can warm up the workpieces before applying glue. A heat gun or a hairdryer works well for this.

Once parts of the joint are warmed up, spread the glue and assemble the joints as quickly as possible. Add the clamps and then wait for the glue to dry.

At this point, the glue is ready to use. It's best that the materials you plan on gluing be above 75 degrees. I've used a heat gun to warm the parts up before applying the glue (photos above).

As mentioned earlier, hide glue cleans up easily with water and a rag. Although hide glue has little effect on stains and finishes, I find it best to remove as much of the excess glue as possible.

RUB JOINTS. As I mentioned earlier, hide glue begins to set up almost immediately. This makes hide glue a great choice for gluing up panels using a rub joint, like you see in the photo below. After adding glue to the edges of each panel, place the two together and begin to rub the two along the joint line to squeeze out the excess glue.

At first, the two pieces will slide back and forth easily, but it won't take long for the parts to begin grabbing. At this point, position the two parts, aligning the edges and ends. You can now remove the assembly from the vise and set it aside to allow the glue to dry completely, without the need for any clamps. It typically takes 24-48 hours for the glue to reach its final strength, but parts can be handled in a few hours.

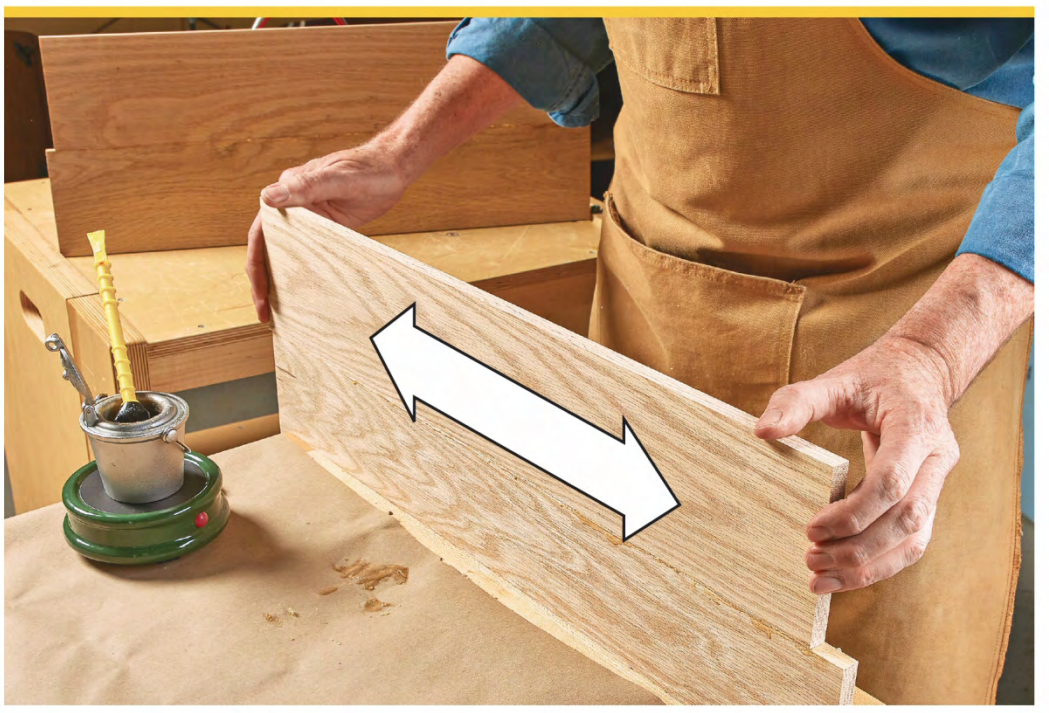

To create a rub joint, press the two edges with glue together, forcing the excess glue out by sliding the workpieces back and forth. As the glue begins to set, align the faces and edges and you're done.

CHEMISTRY. One of the benefits of hide glue is you can change its working characteristics by applying a little chemistry. One characteristic you can change is how fast the glue sets.

To buy a little time, you add salt or urea to the mixture. The amount varies depending on how much extra working time you want but it's best to experiment by adding up to 15% by weight. This should increase the open time to about 5 minutes or so. Of course, there's a downside. Adding anything to the hide glue to change its working characteristics typically reduces its strength. Regardless, for most situations, the glue is still going to be stronger than the wood itself.

There are more ways to change the characteristics of hide glue and you can learn more about them by doing a quick search online, but this gets you started.

FINAL DETAILS. Over time I've found myself turning to hide glue as my adhesive of choice for woodworking projects, specifically liquid hide glue. I think its advantages outweigh any downsides. For your next project, give hide glue a shot. I think you just might like it. W

Cutting Clean, Safe Bevels

When it comes to cutting bevels, I often turn to my hand plane if the angle isn't critical. When the bevel needs to be accurate, such as gluing up a staved container (like the planter on page 26), my table saw can't be beat.

Getting a clean, accurate bevel are easy to do with a couple of steps. Here, I want to walk you through some of the steps I take to get accurate bevels every time.

Digital angle gauges are a great bang-for-the-buck and can be used on various tools.

DITCH THE SAW GUIDE. Most, if not all, table saws come with angles pre-marked on the saw, and you can tilt the blade following these guides. Forget them. Sure, you can calibrate your saw and set stops for the angles, however if you're off just a fraction, your angle isn't going to be accurate. What I do instead is reach for a digital angle gauge, such as the one shown to the left. These little gauges are accurate and easy to set. See the two images above for how to set them. A benefit is they can help reset your saw to a perfect 90° when you're done.

Zero the angle gauge out by placing it on your table saw top and pressing the "zero" button.

Place the gauge on the saw blade, but not the teeth, and tilt the blade until the desired angle is reached.

THE PROPER BLADE. I know, this should go with out saying, but it's extremely important to have the correct blade when cutting bevels. A little bit of burning can be cleaned up on a regular cut, but if you're working on a beveled glue joint, you want a clean cut off the saw. So make sure you're using a clean, sharp

Written by: Logan Wittmer

rip blade for ripping cuts, and switch over to a crosscut blade for making a crosscut. Now's not the time to try and make that rip cut with a crosscut blade (yep, I'm guilty of that as well).

RIGHT VS LEFT TILT. The final thing to think about before cutting is which way does your saw tilt? Not too many years ago, right-tilt saws were the norm. Now, most saws are left-tilt. You can see the different between these in the drawings to the right.

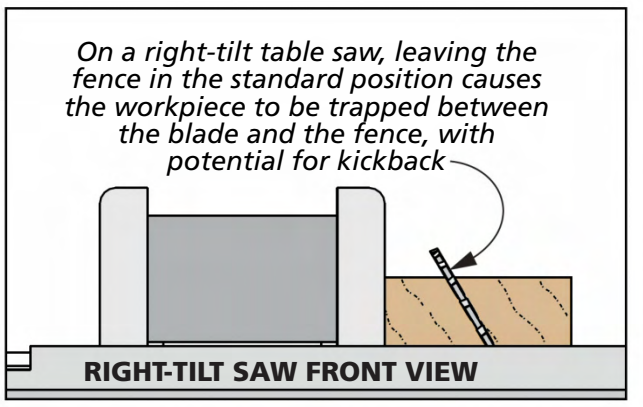

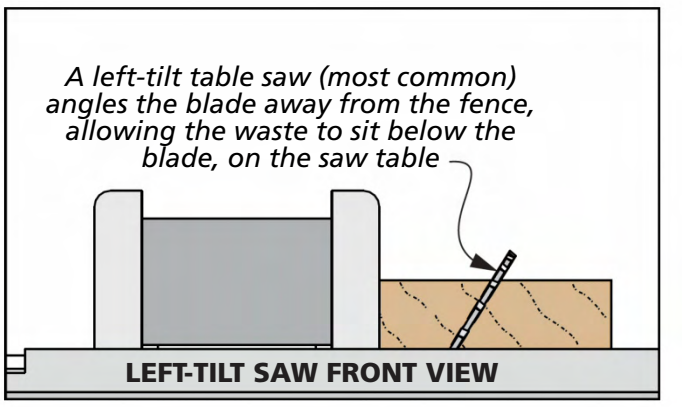

If you have a right-tilt saw, you need to make some special precautions to make sure that the workpiece doesn't get pinched between the fence and blade, leading to a potential kick-back scenario. Most often, this involves moving the fence to the other side of the blade, such as the drawing below. If you need to make a cut on a piece that's too big with the fence in this position, you'll want to call a jig into play. You can read more about this in the box at the bottom of the page.

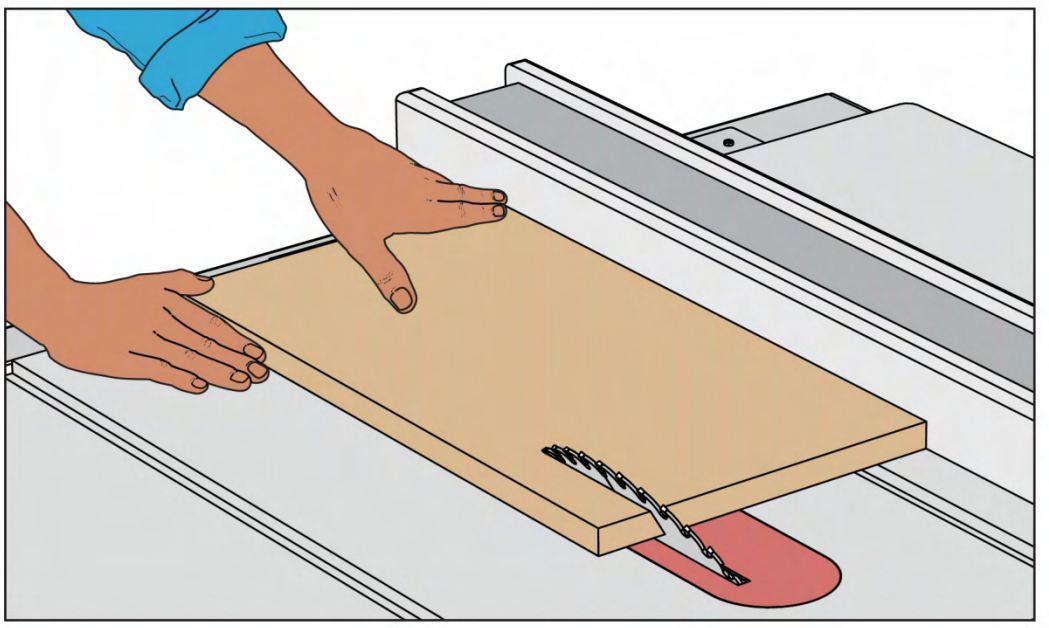

With a right-tilt table saw, making a bevel cut with the fence to the right of the blade can trap the cut and cause a kickback. Shifting the fence to the left ensure a safe, accurate cut as shown above.

MAKE THE CUT. Once your setup is complete, all that's left to do is make the cut. Make a smooth, fluid cut and you'll end up with an accurate, glue-ready bevel. If you're working on staves, such as the main photo on the previous page, keep in mind that you'll need to be careful with the sharp edge along the fence. Take care not to ding it up.

The next time you're working on a project that requires a clean, accurate bevel cut, spend a few minutes at your saw. Some careful, thoughtful setup will yield great results. W

DUAL PURPOSE BEVEL JIG

Vertical Jig. One of my favorite jigs for the table saw is a vertical clamping jig, such as you see here. With a jig like this, you can extend the limits of your bevel cutting abilities and make more acute angles (detail 'a'). This jig is also dual-purpose if you have a right-tilt saw. Because the left wing of the saw doesn't have the same capacity as the right, you can still cut bevels on larger panels by holding the panel vertically. Then, you can make the cut and allow the waste piece to fall away without becoming a kick-back hazard.

GO 2 Online Extras

For plans to make the vertical jig, go to: Woodsmith.com/254

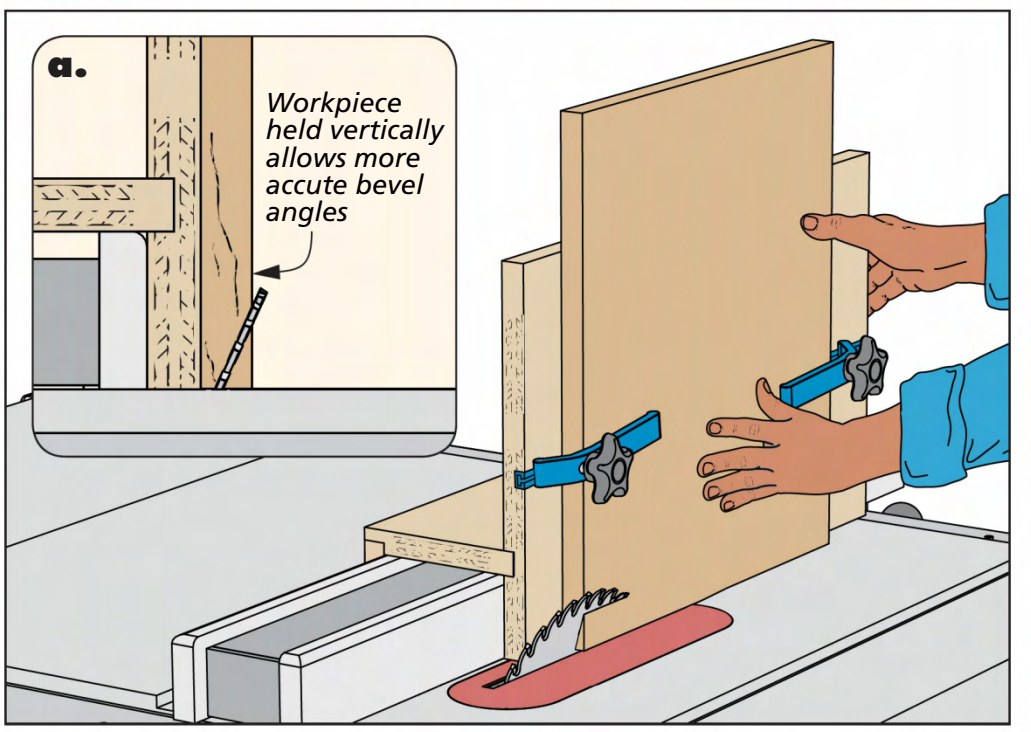

Illustrations: Bob Zimmerman

Sources

Most of the materials and supplies you'll need to build the projects are available at hardware stores or home centers. For specific products or hard-to-find items, take a look at the sources listed here. You'll find each part number listed by the company name. See the left margin for contact information.

MAIL ORDER SOURCES

Amazon.com

Benjamin Moore
BenjaminMoore.com

Cabinet Parts
CabinetParts.com

Easy Wood Tools
Easywoodtools.com

Foam By Mail
foambymail.com

McMaster-Carr
mcmaster.com

Osborne Wood Products
osbornewoood.com

TurnTex, LLC
turntex.com

Rockler
rockler.com

Wild West Hardware
wildwesthardware.com

Woodcraft
woodcraft.com

CARBIDE TOOLS *(p.10)*

- **Easy Wood Tools**

Easy Rougher 2200
Easy Finisher 6300
Easy Detailer. 7300
Easy Hollower #1 6601
Easy Hollower #3 6603

INSERT JOINERY *(p.14)*

- **Rockler**

¼" Dowel Jig. 48169
Biscuit Joiner 90224
Domino Joiner DF500 . . . 43035

STABILIZING/CASTING *(p.20)*

- **TurnTex, LLC**

Cactus Juice Stabilizer . . . . . .
Alumilite Slow . . . . . .

PATIO PLANTER *(p.26)*

- **McMaster-Carr**

½" Copper Bar 8964K4
3/16" Copper Rivets . . 97440A360

The planter was finished with two coats of *Penofin*. When that was dry, the interior and underside was painted with oil paint.

DAYBED *(p.32)*

- **Foam By Mail**

Lux Foam . . . . . LR_1

The bed was finished with a coat of *Watco's* Danish oil in "Black Walnut" and topped with spray lacquer.

BOOKCASE *(p.40)*

- **Osborne Wood Products**

Legs 1355003000HM

- **Woodcraft**

12" Drawer Slides 3M01

The bookcase was finished with two coats of spray lacquer.

ROUTER FENCE *(p.48)*

- **McMaster-Carr**

Through Knobs 6121K311
Studded Knob 91882A429
Cross Dowels 90835A210
Threaded Insert. 95807A300

- **Cabinet Parts**

Plastic Laminate . W1595 335 4X8

The fence was finished with a couple coats of spray lacquer.

Woodsmith® eTIPS

- **Valuable Video Tips** from the Woodsmith Shop TV Show
- **Quick & Easy Printable Tips** from Woodsmith Magazine
- **Latest Video Plans** from Woodsmith Plans

Sign Up Today For FREE Weekly eTips!

► WoodsmithTips.com ◄

RIKON®

70-150VSR

12"x 16-1/2" VSR Midi Lathe

NEW

5 YEAR WARRANTY

1 HP VSR Motor | Forward & Reverse | 16-1/2" Between Centers

Designed with a powerful **1 HP motor**, featuring variable speed control, & forward/reverse.

Control Box has a magnetic back so that it can be set anywhere along the lathe for quick access when turning.

1" x 8 TPI threaded spindle Ball-Bearing Construction for Smooth, Precise Spindle Operation

Machined headstock end milled to take a special 13-1/2" bed extension to allow outboard turning of diameters up to 15".

SOLD SEPARATELY

Call today for more information **877-884-5167** or visit **www.rikontools.com** for a dealer near you!

OUR BOND IS OUR WORD

You're serious about your woodworking projects. So are we.

Titebond wood glues offer the proven performance, respected advice and trusted solutions you demand. We remain committed to being there with you for every project.

Titebond®

titebond.com | 1-800-347-4583

01105_5227TF

Sign Up for Free Weekly eTips

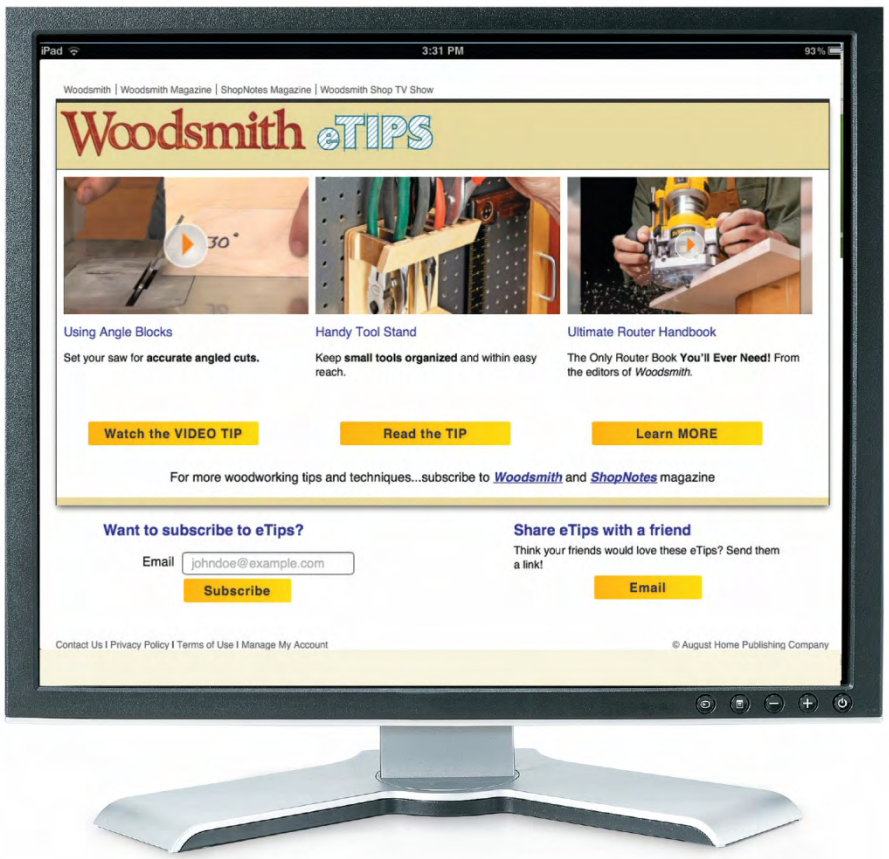

Desktop

- Get a video tip sent to you every week
- Includes a printable, step-by-step tip
- Ready when you are — on any device

Laptop

Tablet

Smartphone

Sign up today at Woodsmith.com

Woodsmith

Back Issue Library **Online**

An Incredible **VALUE!**

- Access every issue of Woodsmith ever published — over 228
- Get over 4,000+ projects, tips and technigues.
- Enjoy instant online access on your computer, laptop — even tablet.

LEARN MORE at www.woodsmithlibrary.com